Cape Collection

Premium Fireclay Farmhouse Apron Sink

Nantucket SINKS

www.NantucketSinksUSA.com
info@nantucketsinksusa.com

model:

T-FCFS36-DBL

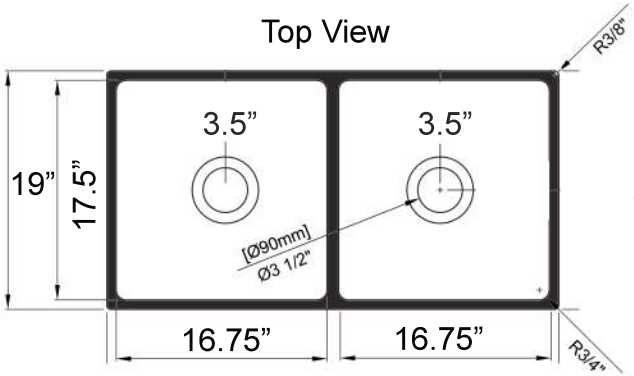

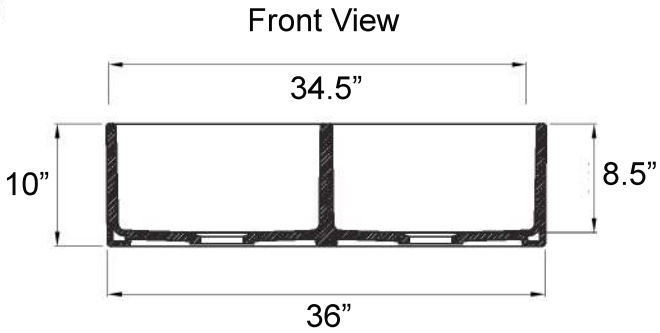

OVERALL DIMENSIONS	INTERIOR BOWL	APRON HEIGHT	INTERIOR BOWL DEPTH	DRAIN DIMENSIONS
36" x 19" x 10"	16.75" x 17.5" each	10"	8.5"	3.5" Opening

FEATURES:

- Fireclay Double Bowl Farmhouse Apron Sink
- Template Not Included
- Very Heavy 2 Person Lift Recommended
- Limited Warranty
- Includes Drains & Grids
- Nominal Dimensions, actual may vary up to .25"
- Apron base cabinet required

Project Name: _____

Architect / Contractor:

Job Notes: _____

_____

_____