47.3" SWB SERIES BASIN

SWB-S47.3-CHB
SWB-S47.3-GW

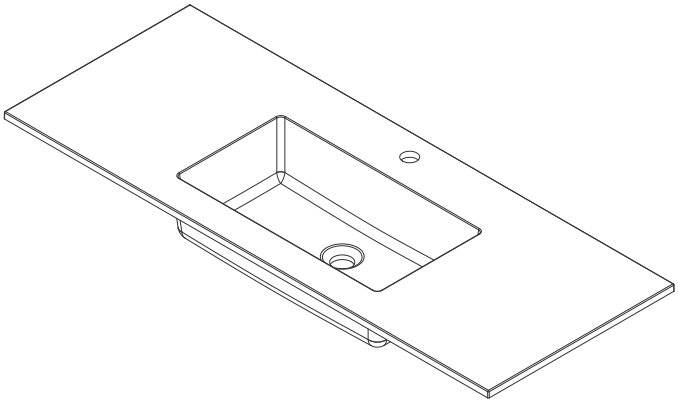

Features and Materials

Materials
Countertop Materials: Composite Stone
Number of Basins: One, Integrated Sinktop
Basin Overflow: NO
Certifications: ICC-ES PMG-1568

Dimension

Length: 47-1/4"
Width: 18-1/8"
Basin Depth: 5-1/8"
Basin Length: 19-5/8"
Basin Width:10-1/4"
Overall Height: 6"
Profile Height: 5/8"
Drain Hole Size: 1-3/4"

Visit website for warranty and installation information
www.jamesmartinvanities.com

Version: 202307

47.3" SWB SERIES BASIN

SWB-S47.3-CHB
SWB-S47.3-GW

JAMES MARTIN VANITIES

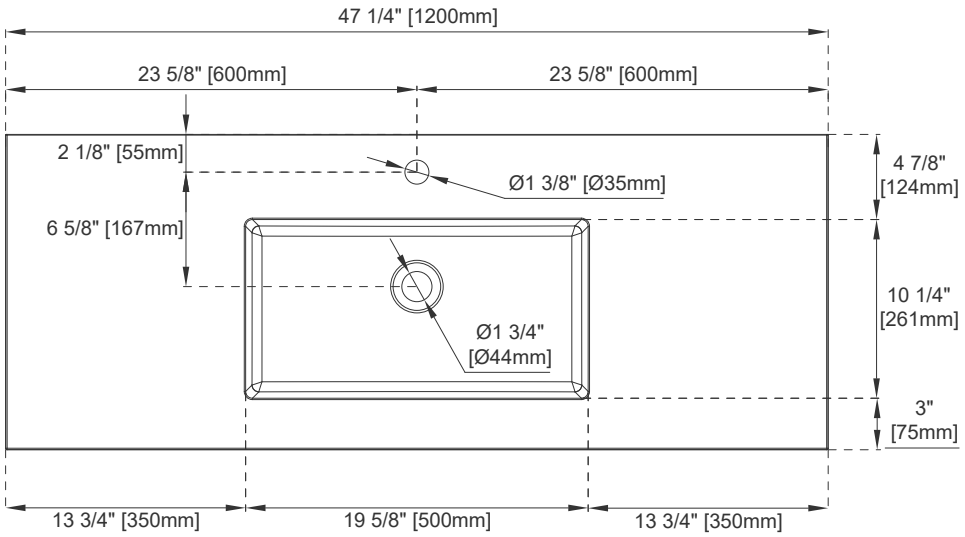

Top View

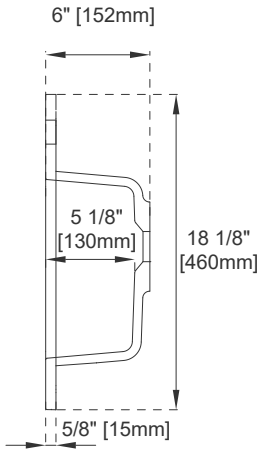

Side View

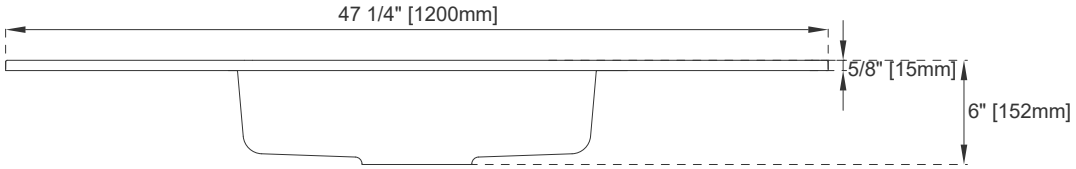

Front View

All dimensions are nominal

Visit website for warranty and installation information
www.jamesmartinvanities.com

Version: 202307