ENIGMA-XO

Shower Enclosure Installation Instructions

PLEASE REVIEW THIS ENTIRE MANUAL PRIOR TO INSTALLATION

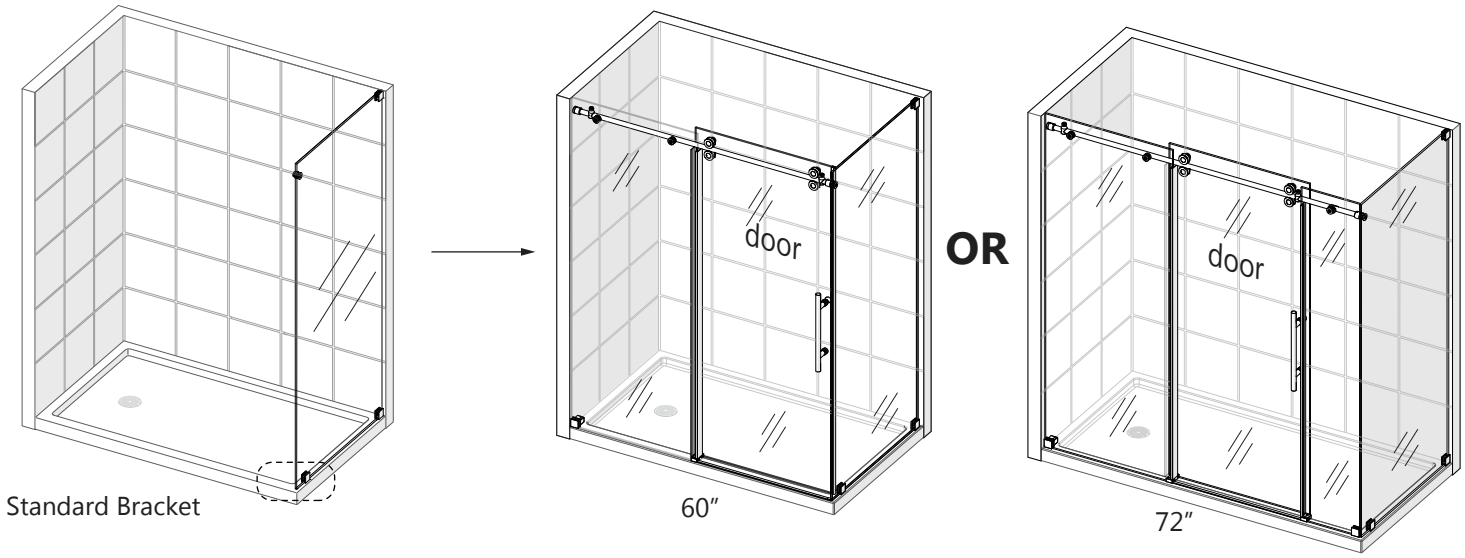

STEP 1: **Install Return Panel** → **STEP 2:** **Install Shower Door**

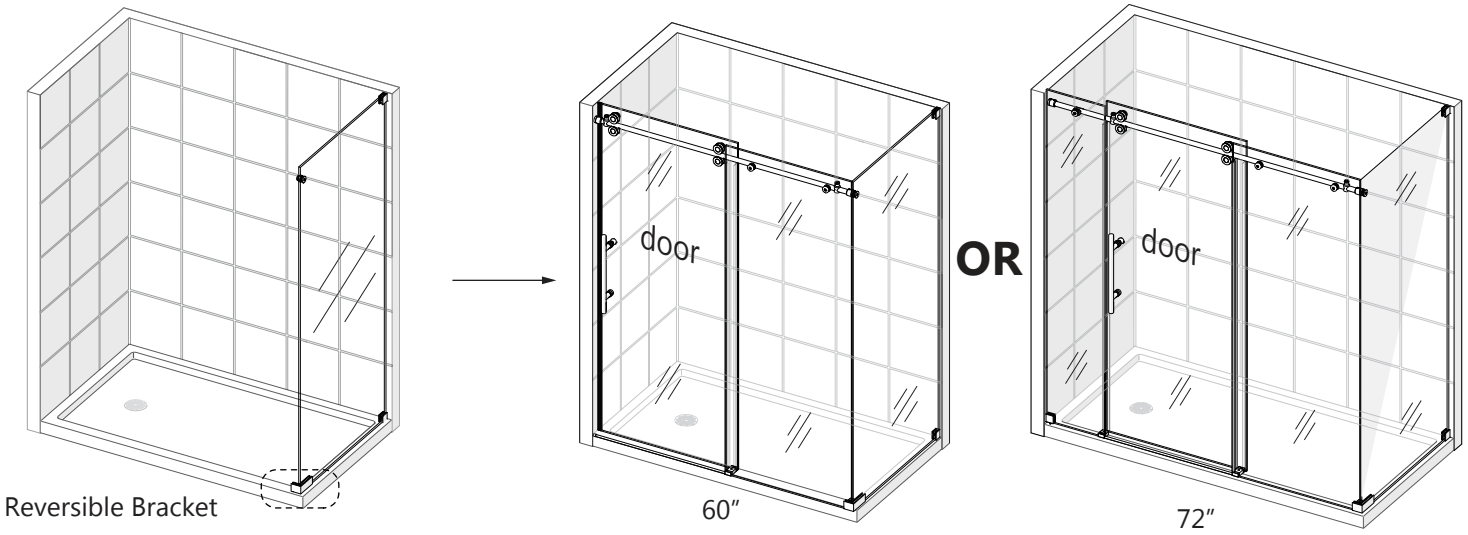

Questions?

Please Call ***DreamLine*** *Customer Support:* **1-855-831-2126**

Hours of Operation M-F 8AM - 7PM EST and Saturday 9AM - 5PM EST

Support@DreamLine.com

For more information about DreamLine® products please visit DreamLine.com

©2019 DreamLine® All Rights Reserved

DREAMLINE®
dream in style

Use this manual first

ENIGMA-X/ENIGMA-XO Enclosure Return Panel

SHOWER ENCLOSURE RETURN PANEL INSTALLATION INSTRUCTIONS

PLEASE REVIEW THIS ENTIRE MANUAL PRIOR TO INSTALLATION

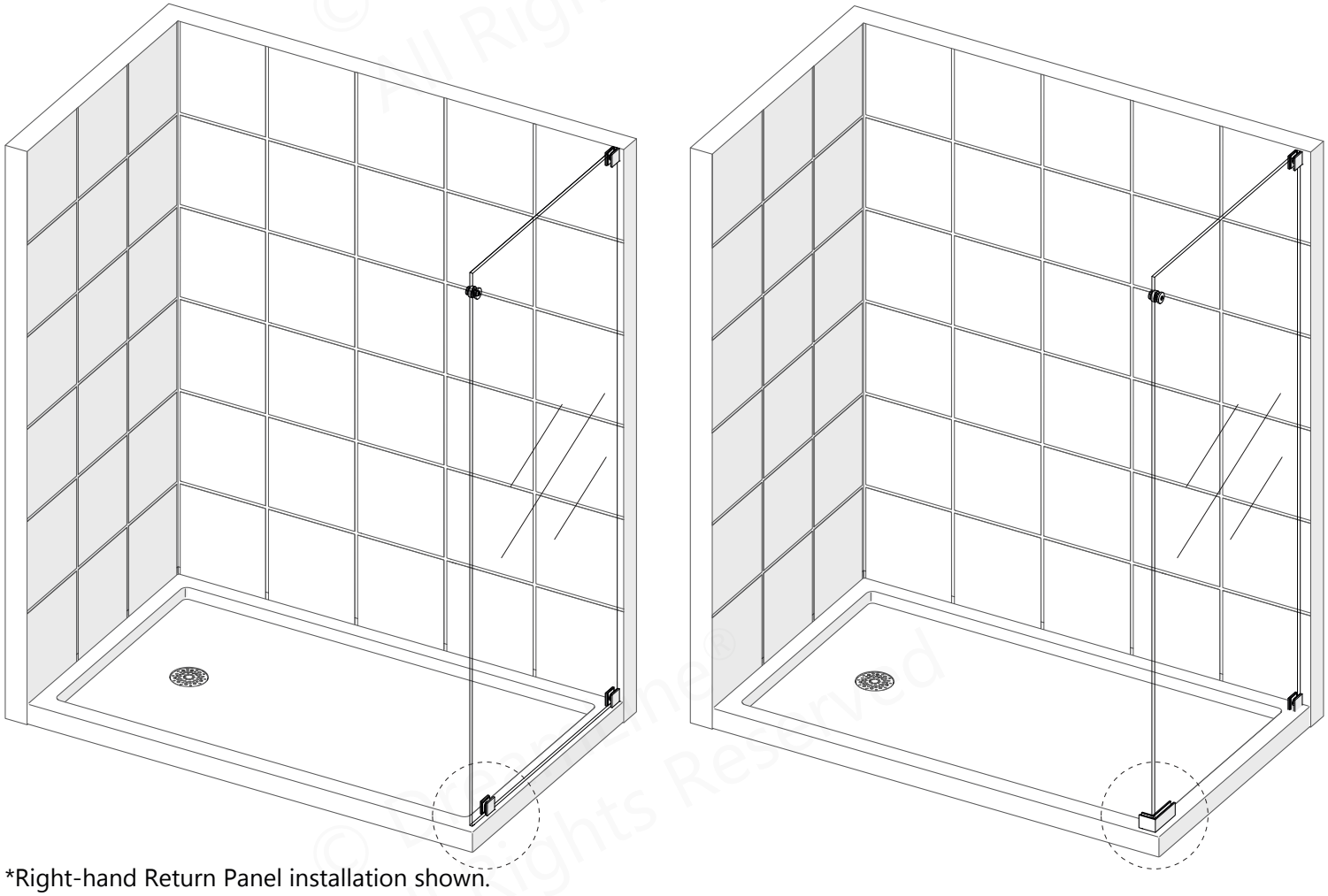

*Right-hand Return Panel installation shown.

IMPORTANT!
DreamLine® reserves the right to alter, modify or redesign products at any time without prior notice for the purpose of product improvement and customer experience. Please refer to the model's web page on **DreamLine.com** for the latest technical drawings, installation manuals, warranty information or additional product details.

Do Not Return Product to the Store. Contact DreamLine® with any questions

Questions?
*Please Call **DreamLine** Customer Support:* **1-866-731-2244**
Hours of Operation M-F 8AM - 6PM EST

Support@DreamLine.com

©2019 DreamLine® All Rights Reserved

©2019 DreamLine® All Rights Reserved

DREAMLINE®
dream in style

CLEARMAX®

This model is treated with DreamLine's exclusive ClearMax™ Glass technology. This is a specially formulated coating that prevents the build up of soap and water spots.

Install the surface with the ClearMax™ label towards the inside of the shower. Please note that depending on the model, the glass may be coated on either one or both surfaces.

For best results, squeegee the glass after each use and dry with a soft cloth.

Record the following purchase information for your records or in the event you need to contact DreamLine®:

Purchase Order Number _____

Installation Date _____

Installed By: _____

Store/Vendor Purchased From _____

OD Number (optional) _____
*found on the shipping box or label if available.

SKU Number _____

Table of Contents

Section Title	Page #
ClearMax® Coating Information	---
Warnings and General Preparation	3
Model Specific Preparation	4
Applications	5
Tools	6
Shower Enclosure Plan	7-8
Detailed Diagram of Return Panel Components: **Option 1**	9
Detailed Diagram of Return Panel Components: **Option 2**	10
Parts List	11
Installation Steps: **Option 1**	12-18
Installation Steps: **Option 2**	19-25
Glass Connector Installation	26
Reversible Bottom Corner Bracket Feature	27
Product Maintenance	28
Troubleshooting	29
Factory Part Information	30

This Return Panel is not sold as or intended to be a stand-alone product. This Stationary Return Panel Glass must be installed first as part of an Enigma-X or Enigma-XO shower enclosure.

Symbol Legend

TIP - for ease of installation.

CORRECT - recommended.

NOTE - take note of special feature; additional information.

INCORRECT - not recommended.

REQUIRED - requires special attention; signifies a warning.

STOP - denotes pausing installation to continue in an accompanied manual

Average Installation Time

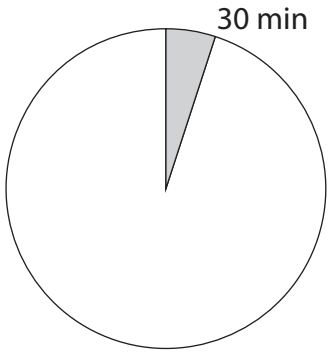

©2019 DreamLine® All Rights Reserved

©2019 DreamLine® All Rights Reserved

IMPORTANT

- DreamLine® reserves the right to alter, modify or redesign products any time without prior notice for product improvement and customer experience. Please refer to the model's web page on **DreamLine.com** for the latest technical drawings, installation manuals, warranty information or additional product details.
- This product should be installed by someone familiar with the construction requirements for this type of project and the care necessary for the safe installation and operation of the product.
- The safety of any installation is the responsibility of the installer.
- Professional installation recommended. *(All Models)*
- Professional installation required. *(Enigma Series)*
- To prevent damage or serious injury, Do Not lean against the installed panel/door/glass.
- To prevent damage or serious injury: Do Not attempt to lift or move a heavy lite of glass alone. Use an assistant and/or a professional grade glass suction cup.
- The installation of some models may require drilling down into the threshold. Contact the manufacturer of the base, tub, or threshold material with any questions regarding the drilling of holes into their product.
- All drawings in this installation manual are for illustrative purposes only and are not drawn to scale.

TEMPERED GLASS WARNING

- Your Shower Door Glass Could Shatter Without Warning if Improperly Installed or Mishandled
- Do Not install or operate a shower door if the glass has chipped corners, slivered edges or is otherwise damaged and/or has been dropped or banged into a hard surface such as tile, marble or glass.
- **The main causes of tempered glass breakage are:**
  - Improper handling, storage or installation
  - Misuse/abuse
  - Lack of maintenance
  - Failure to replace damaged glass
  - **Improper handling during storage, unpacking and installation:**
  - Corners and edges are the most susceptible area to damage on a lite of tempered glass and should be protected and handled with care during storage, unpacking, installation and operation. A concentrated point of pressure or impact with a surface harder than itself may cause the tempered glass to shatter. The tempered glass may release immediately, within several hours or even days later.
  - **Incorrect installation of door hardware, rollers, hinges, channels, stopper or glass:**
  - Improper installation may include: loose hardware and/or lack of proper gaskets between the hardware and glass. Additionally, improper alignment of guide rails, wall profiles or other hardware during installation or operation may place stress on the glass edges and cause it to break.
  - This product must be installed by a professional and experienced installer familiar with the safe handling of tempered glass.
  - **Improper use of this product:**
    - Aggressively opening or closing the door may cause trauma to the glass, which can lead to breakage. This may occur immediately or hours or even days later.
    - **The shower door hardware and glass should be inspected periodically:**
      - Instruct the homeowner how to perform a periodic inspection of the shower hardware and glass - some minor adjustments may be necessary based upon the use (or misuse) of the shower door. Ensure that the hardware remains tight and that the door alignment and operation are correct. Any adjustments should be made upon discovery to prevent damage to the product.
      - Additional considerations should be given to the installation of frameless tempered glass products in households with young children or an elderly person due to an increased chance of improper handling. In such cases, alternatives such as shower curtains or grab bars should be considered.

GENERAL PREPARATION

- After opening all boxes and packages, read this introduction carefully. Check that all the items are included in the package by marking off the components on the **"Detailed Diagram of Product Components"** page. Examine all boxes and packages for shipping damage. If the unit has been damaged, has a finishing defect, or is missing parts; please contact our Customer Support department within 3 business days of the delivery date. **Please note that DreamLine® will not replace any damaged products or missing parts free of charge after 3 business days or if the product has been installed.** Please contact DreamLine® if you have any questions.
- **Please note that you should refer to your local building codes with questions on installation compliance standards. Building and plumbing codes may vary by location, and DreamLine® is not responsible for code compliance standards for your project and will not accept any returns.**
- If this unit is going to be installed in a new construction, install all the required plumbing and drainage before installing the shower. **Use a competent and licensed (if required by local code) plumber for all plumbing installation.**
- Make sure that prior to beginning the installation, the surfaces are leveled and solid and will be able to support the total weight of the unit. Also make sure the walls are at right angles. Irregular installation surface level, radius corners or improper angle of side walls will result in serious problems for your installation. Please note that some adjustments and drilling will be necessary during the installation process.
- Protect all primary surfaces of the product during installation. Never set your glass down directly onto a tile floor. Leave corner protectors in place until it is necessary to remove them. Always use a piece of wood or cardboard to protect the bottom edge and corners of the glass prior to and during installation.
- This unit must be installed upon a finished threshold and against finished walls.
- *DreamLine® shower doors are not designed to be installed into a fiberglass surround due to the radius corners and lack of a solid surface to mount the hardware.*

WARNING: TO AVOID THE RISK OF DAMAGE OR INJURY:

- **Follow all recommendations and requirements as shown in the installation instructions.**
- Perform a thorough inspection of the glass and all parts for any damage prior to installation. Any damage to tempered glass can cause breakage.
  Do Not install damaged glass!
- Do Not install or operate a shower or tub door if the glass has chipped corners, slivered edges or is otherwise damaged. Do Not install or operate a shower or tub door that has been dropped or banged into a hard surface such as tile, marble or glass.
- **CAUTION:** Contact with any hard surface can damage tempered glass and cause it to shatter.
- This product uses tempered glass. Glass cannot be cut after it has been tempered.
  Do Not attempt to cut tempered glass.
- DreamLine® Glass Shower doors, Tub doors, Inline panels, and Return panels can shatter due to improper handling or lack of maintenance. Conduct periodic inspections of glass and all parts for possible damage, missing or loose parts.
- Always wear proper safety equipment such as: safety goggles, work gloves and appropriate footwear during the installation process.
- **WARNING. Risk of leakage and/or damage.** Follow all instructions regarding the application of silicone sealant or caulk. Allow 24 hours for the sealant to cure before the initial use of the shower or tub product. Follow the silicone manufacturer's recommendations regarding the use of their product.

- **Thoroughly read these instructions before installing or using this product.**
- **Leave this manual for the end-user of the product.**

This product should be installed by someone familiar with the construction requirements for this type of product and the care necessary for the safe installation and operation of the product.

Model Specific Preparation

REQUIRED:

No Out-of-Plumb Adjustment; Verify threshold and walls with a level

Threshold must be level

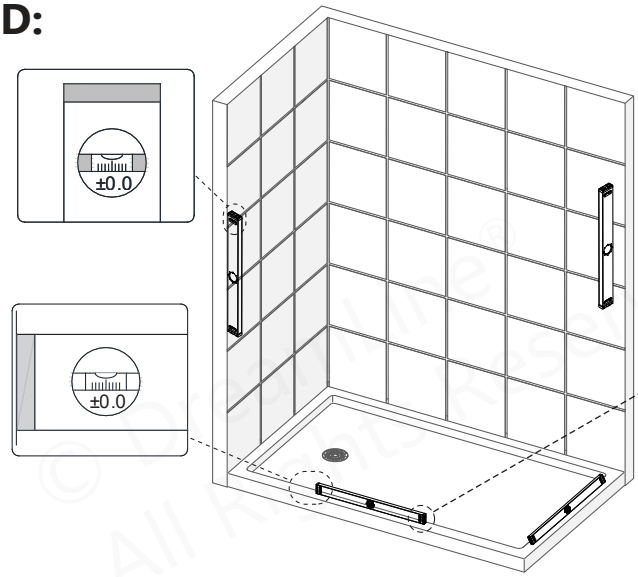

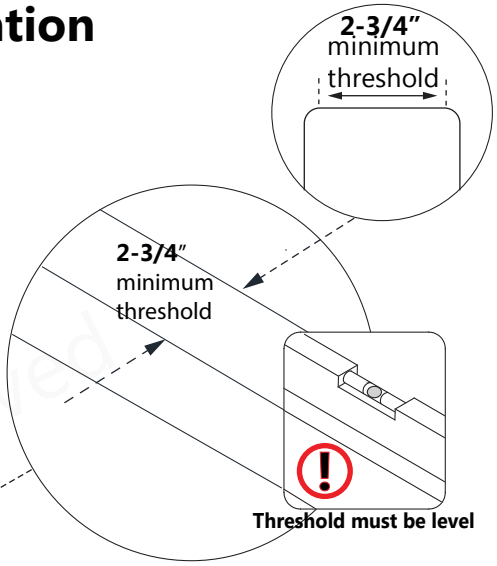

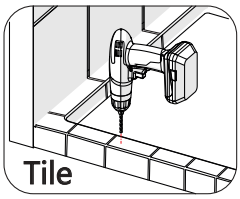

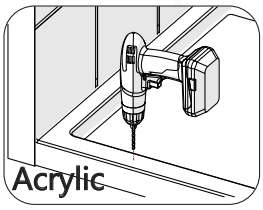

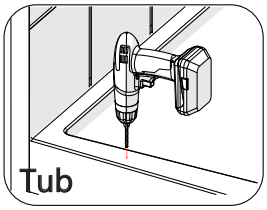

TIP Contact the manufacturer of the base, tub or threshold material with any questions regarding the drilling of holes into their product.

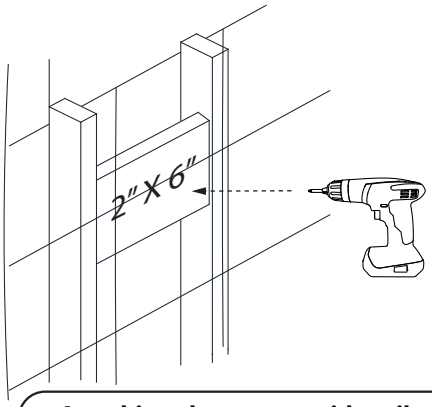

Attaching the upper guide rail brackets into a stud or 2×6 wood reinforcement is recommended.

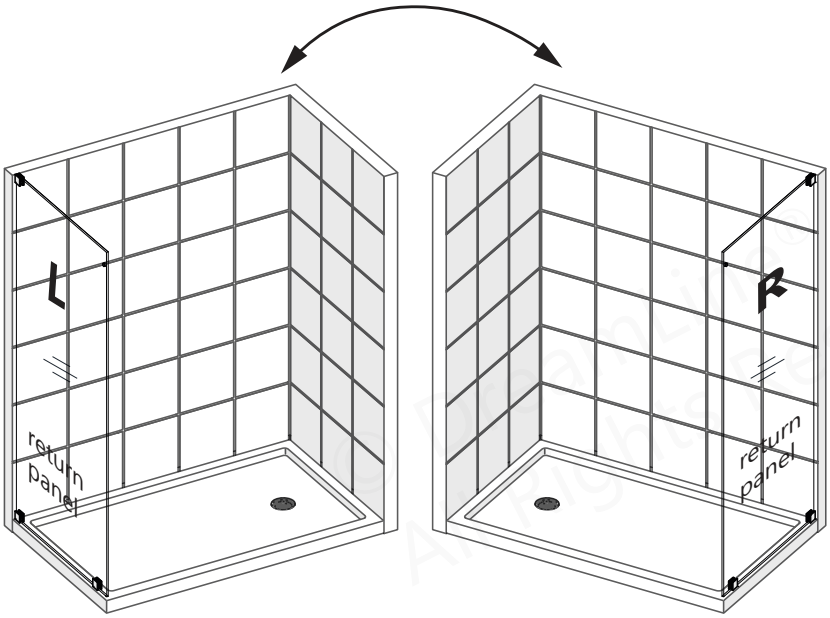

TIP This panel is reversible for left or right-hand installation. The right-hand return panel installation is shown as an example throughout this manual. For the left-hand return panel installation, simply begin on the opposite wall and reverse the orientation of the steps shown.

This model is also reversible for left or right-hand Door installation using the Reversible Bottom Corner Bracket. Both options are shown in this manual. See page 5 "Applications" for an overview of the standard and the reversible bottom bracket for the return panel.

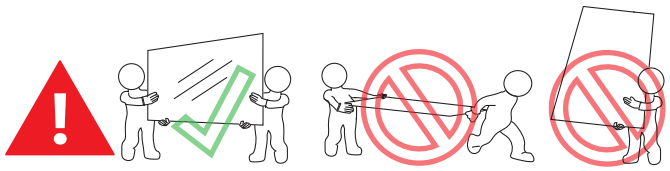

This door requires professional installation. Two installers recommended.

©2019 DreamLine® All Rights Reserved

Applications

ENIGMA-X Enclosure

MODEL #s
SHEN-6132481-##
SHEN-6132601-##
SHEN-6134480-##
SHEN-6134600-##

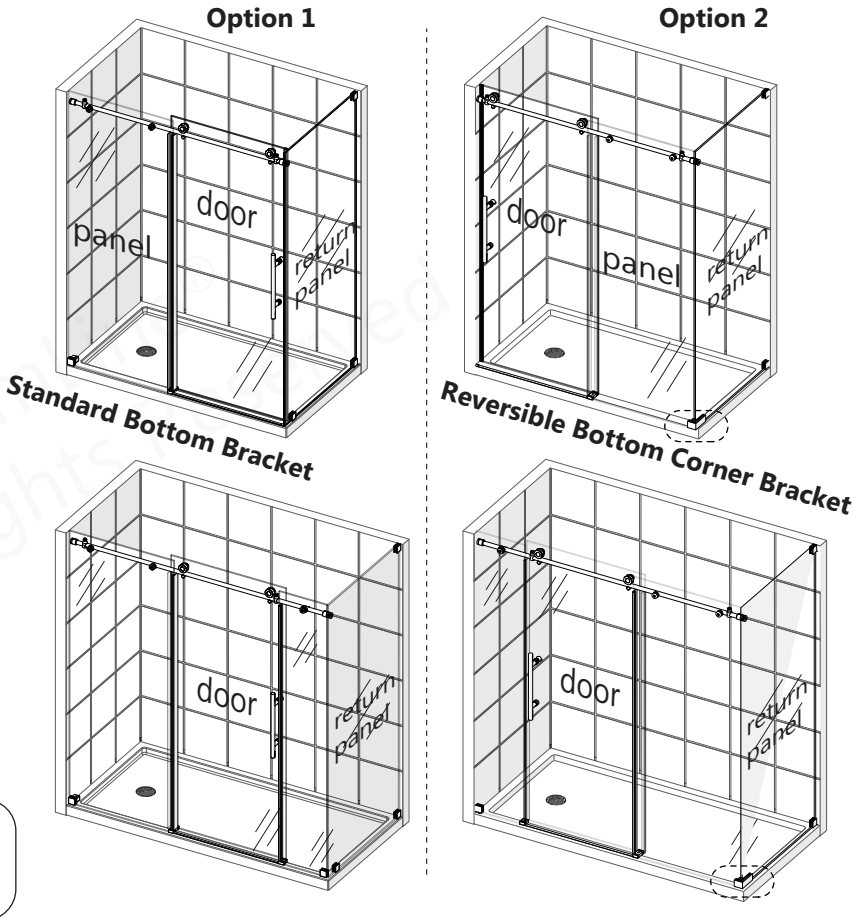

MODEL #s
SHEN-6132721-##
SHEN-6134720-##

This return panel is used with the Enigma-X enclosure and must be installed first using this manual.

ENIGMA-XO Enclosure

MODEL #s
SHEN-6132482-##
SHEN-6134482-##
SHEN-6132542-##
SHEN-6134542-##
SHEN-6132602-##
SHEN-6134602-##

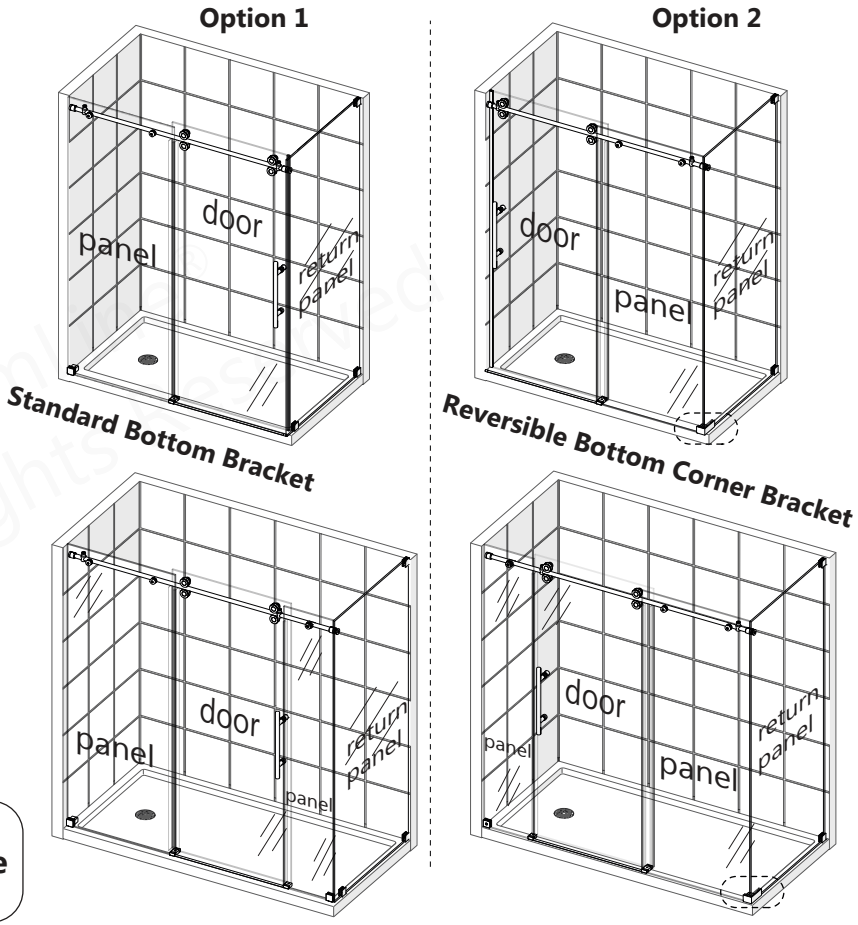

MODEL #s
SHEN-6132722-##
SHEN-6134722-##

This return panel is used with the Enigma-XO enclosure and must be installed first using this manual.

©2019 DreamLine® All Rights Reserved

Tools

Level

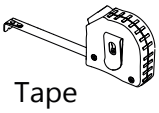
Tape Measure

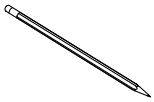
Pencil

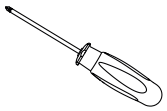
Phillips Screwdriver

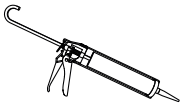
Silicone

Power Drill

Drill Bit Ø1/8" (3mm)

Drill Bit Ø3/16" (4mm)

Drill Bit Ø5/16" (8mm)

Soft Head Hammer

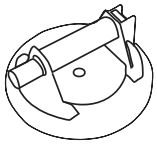
Professional-grade Glass suction cup

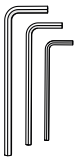
Allen Wrench (3, 4, 5mm)

Safety Glasses

Work Gloves

TIP **Use a good quality waterproof, mildew-resistant 100% silicone caulk.**

! **Threshold must be level; Walls must be plumb.**

TIP **Measure the finished opening before proceeding with the installation to be sure that the correct model size has been ordered.**

TIP **Be sure to cover the shower drain to prevent losing small parts.**

NOTE Unpack your unit carefully and inspect it. Lay it out and identify all parts using the **Detailed Diagram(s)** on pages **9** and **10**; and packing list in this manual as a reference. Before discarding the carton, check for small hardware bags that may have fallen to the bottom of the box. If any parts are damaged or missing, please contact DreamLine® for replacement. The shipping boxes may contain extra parts not used in your model configuration. Retain these installation instructions for future reference.

©2019 DreamLine® All Rights Reserved

Shower Enclosure Plan

*overall outside dimensions shown for the installed enclosure

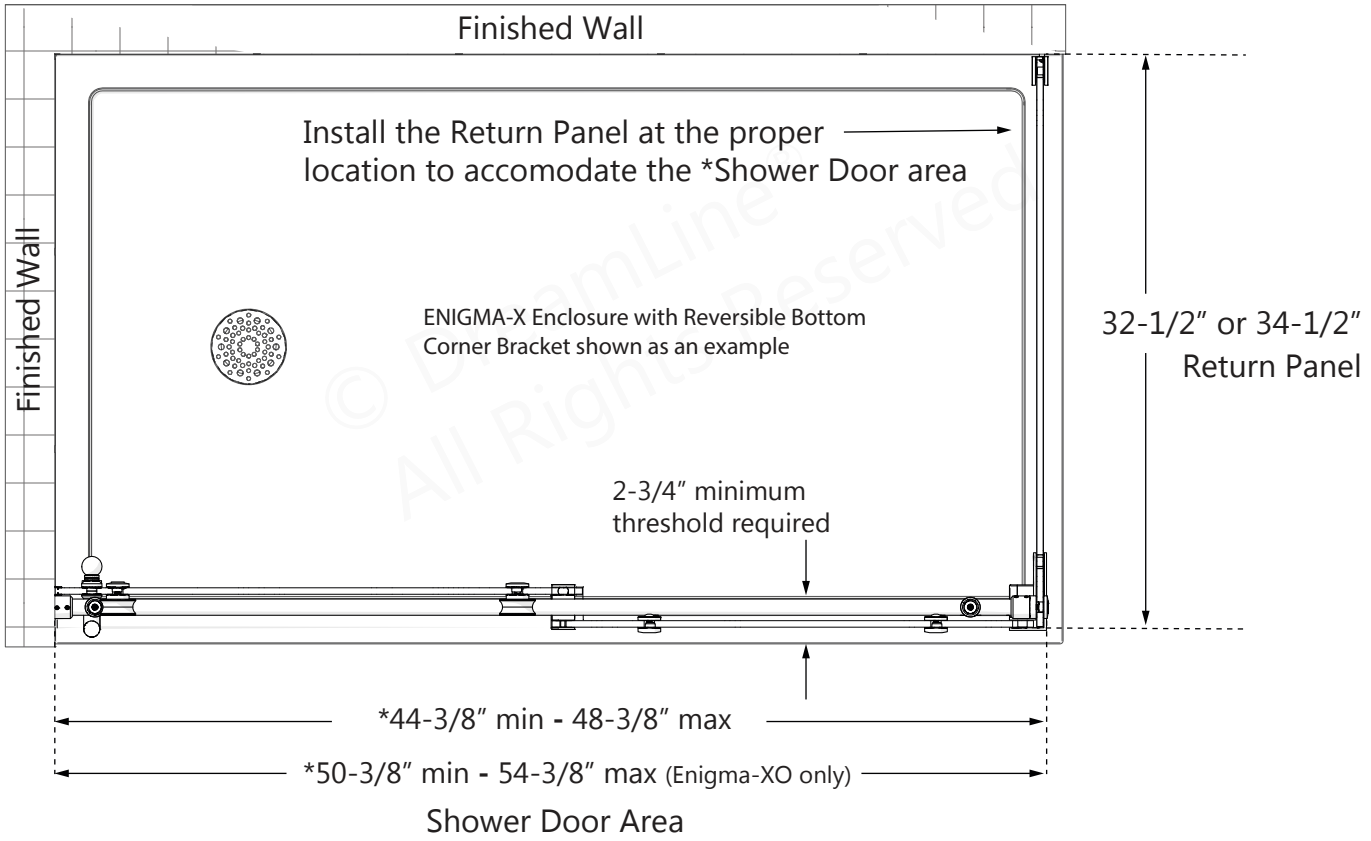

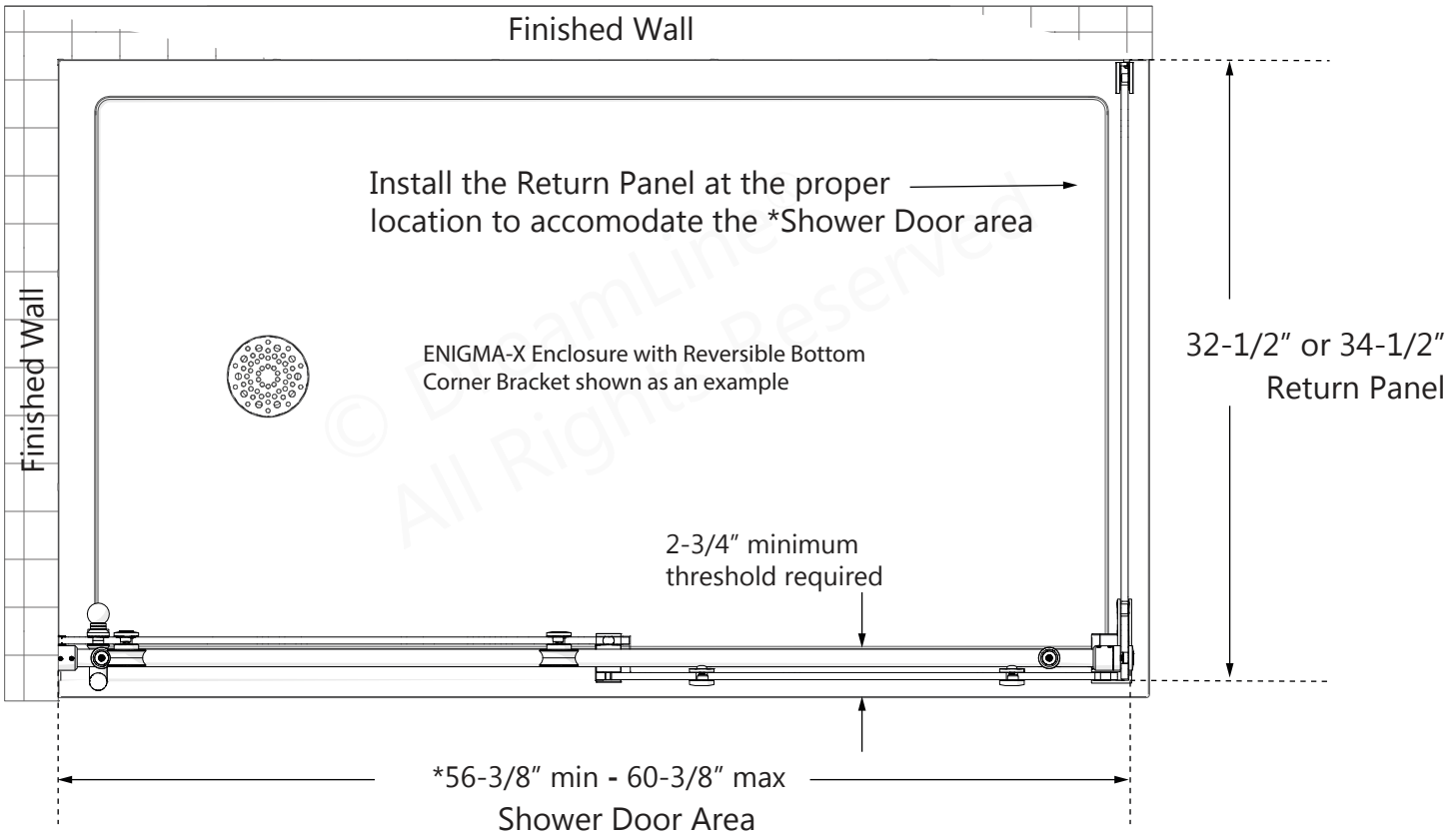

©2019 DreamLine® All Rights Reserved

Shower Enclosure Plan

*overall outside dimensions shown for the installed enclosure

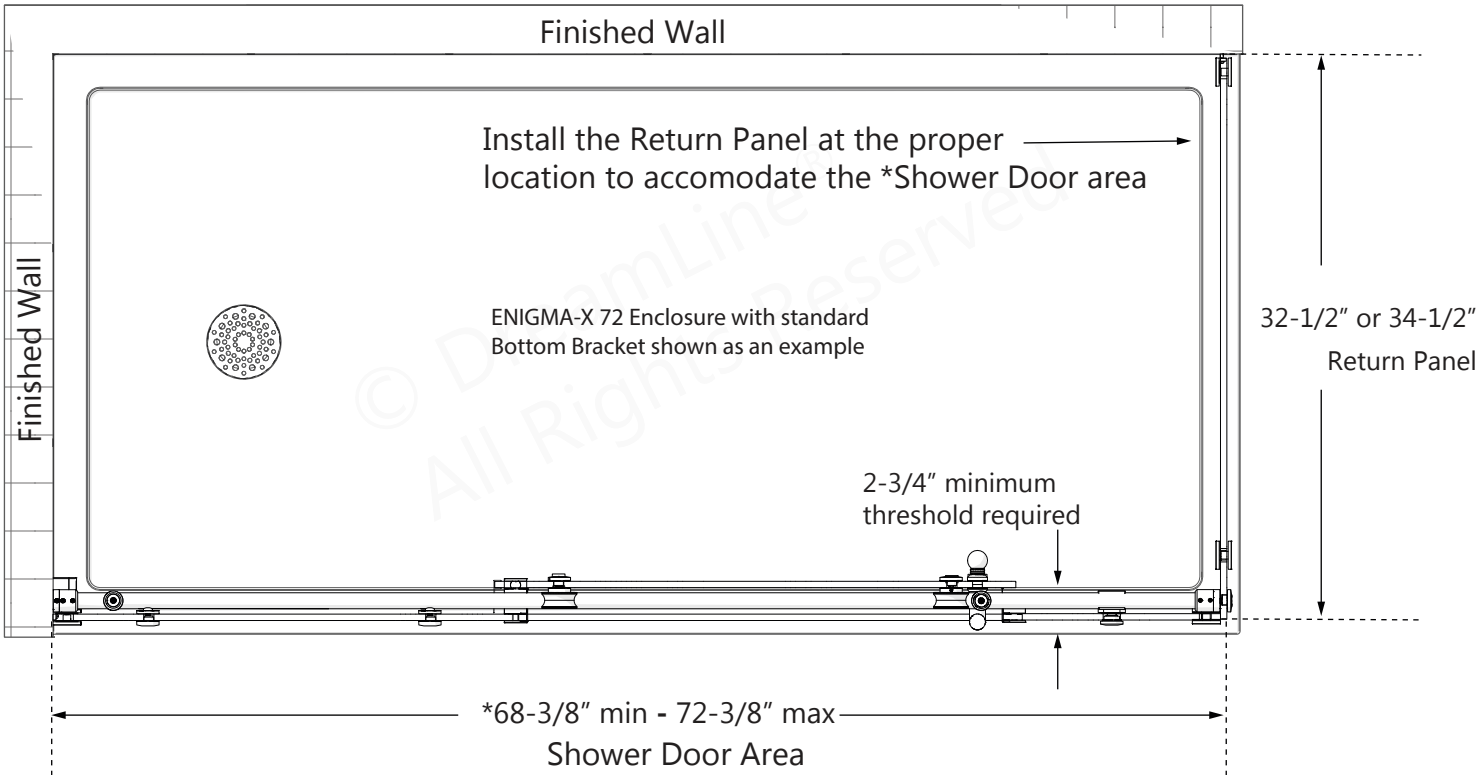

Consider how the thickness of the wall treatment (i.e., wallboard, tile, etc.) will affect the shower enclosure placement on the threshold.

Compare the overall outside dimensions of the shower enclosure model size as shown in the **Shower Enclosure Plan** with the finished threshold before proceeding with the installation to ensure proper fit.

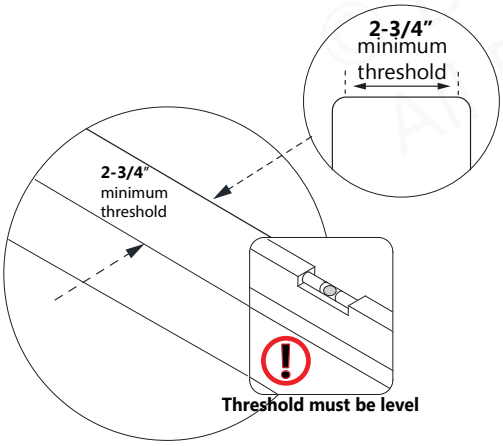

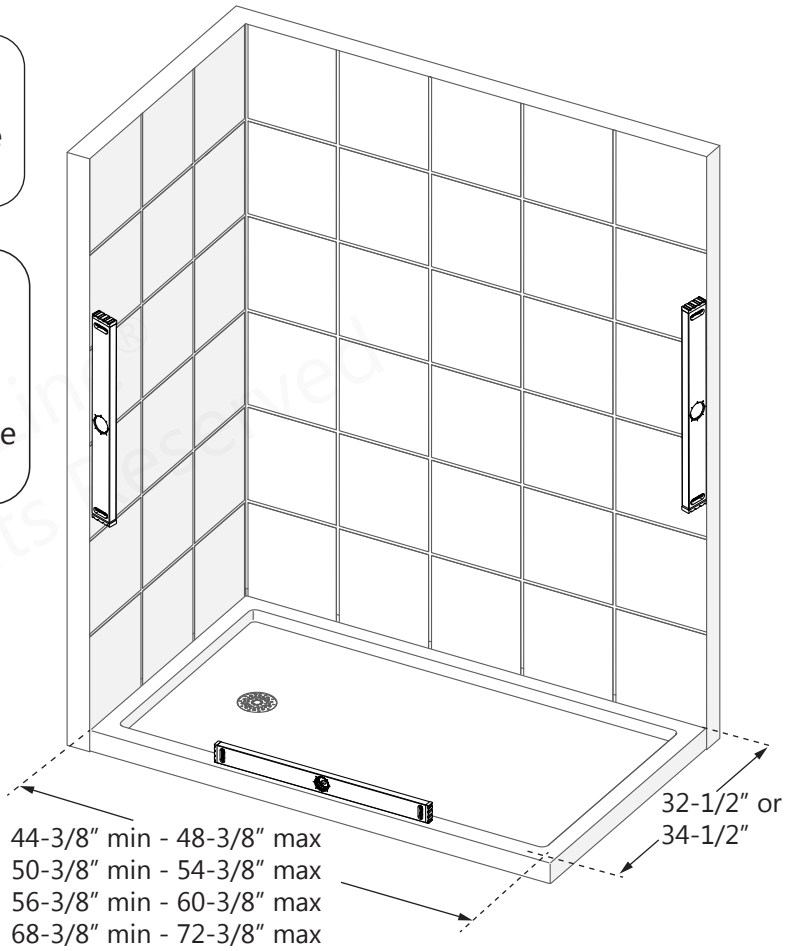

*outside dimensions of installed shower enclosure

©2019 DreamLine® All Rights Reserved

Detailed Diagram of Enclosure Return Panel Components: Option 1

Begin on Page 12

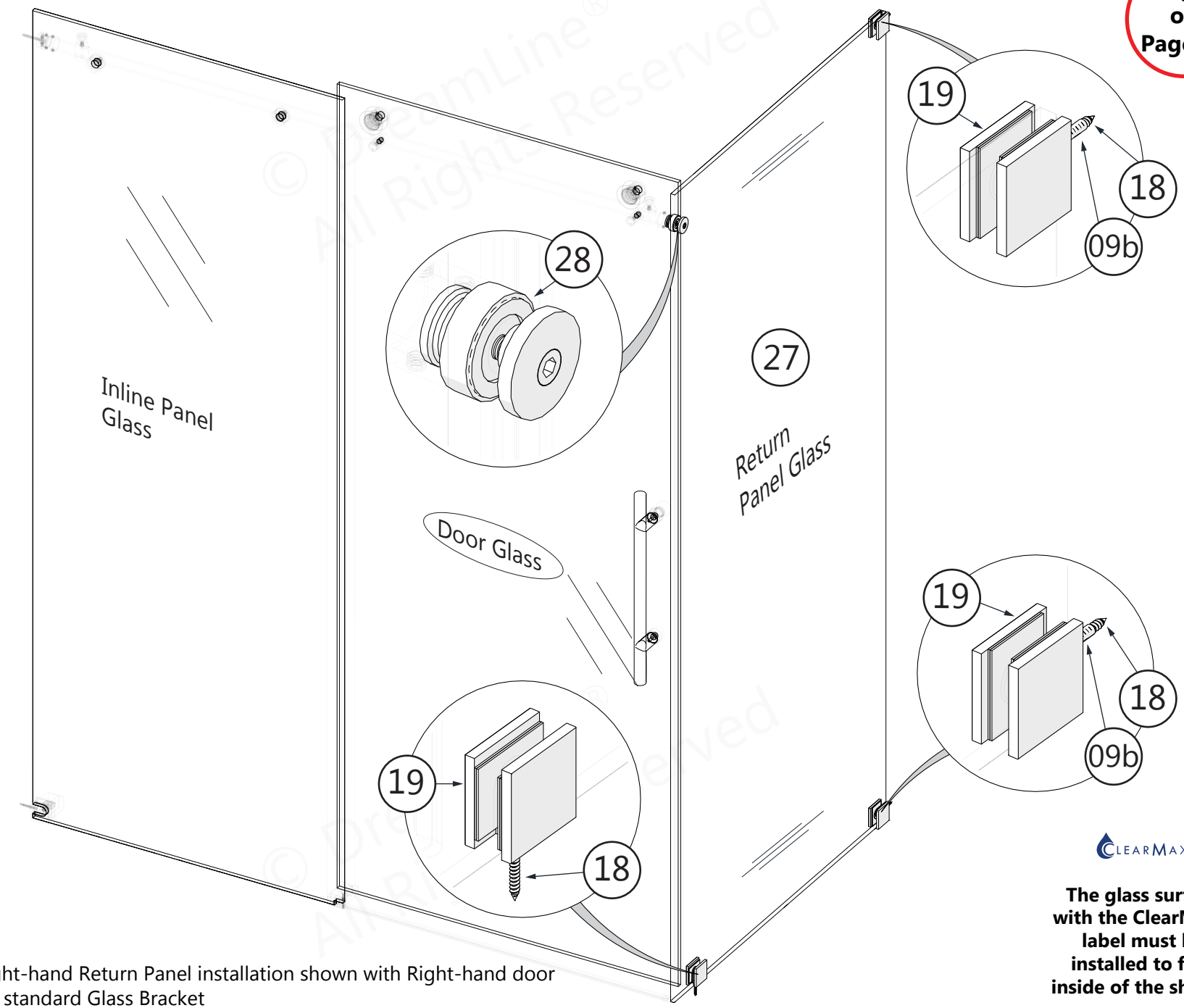

*Right-hand Return Panel installation shown with Right-hand door and standard Glass Bracket

ClearMax

The glass surface with the ClearMax™ label must be installed to face inside of the shower

© 2019 DreamLine® All Rights Reserved

Detailed Diagram of Enclosure Return Panel Components: Option 2

Begin on Page 19

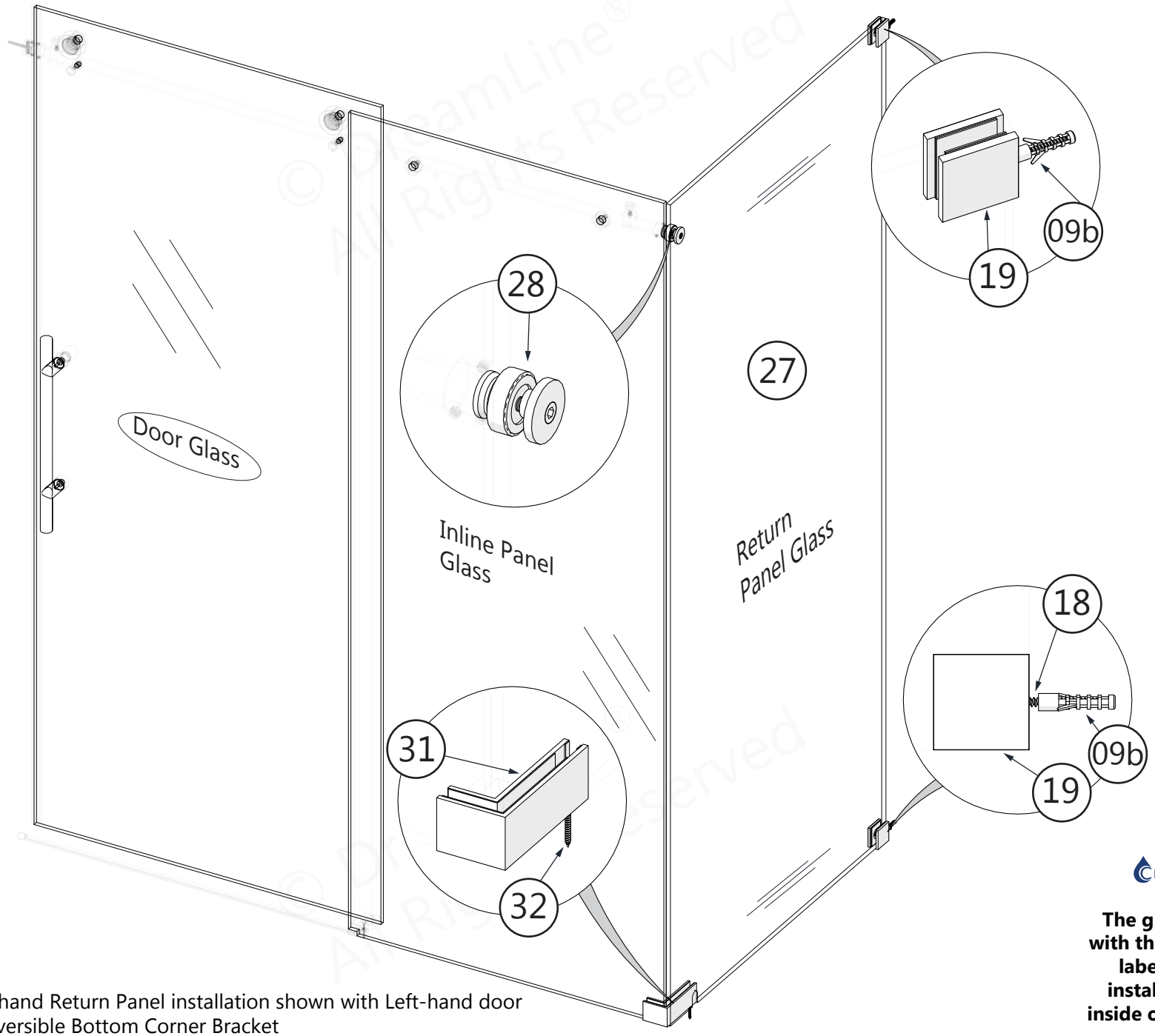

*Right-hand Return Panel installation shown with Left-hand door and Reversible Bottom Corner Bracket

ClearMax

The glass surface with the ClearMax™ label must be installed to face inside of the shower

© 2019 DreamLine® All Rights Reserved

Parts List

09b

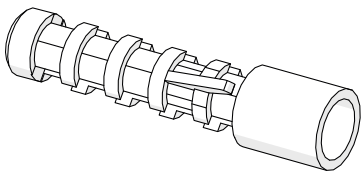

Wall Anchor Ø5/16″ x2

18

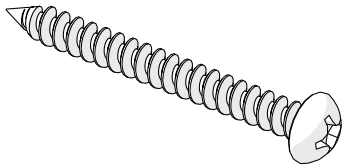

ST4.2×55
Truss Head Screw x2

19

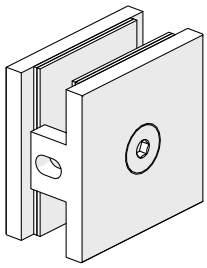

Glass Bracket x3

27

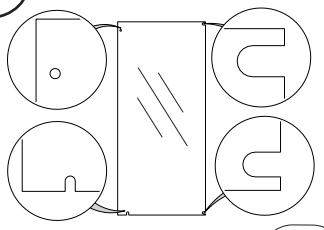

Return Panel Glass x1

28

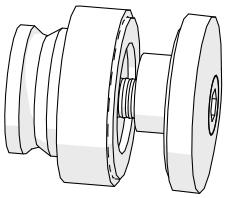

Glass-to-Guide
Rail Connector x1

31

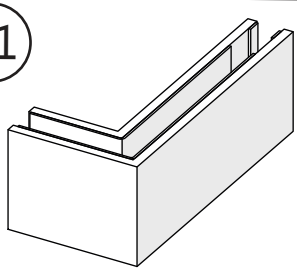

*Reversible Bottom
Corner Bracket x1

32

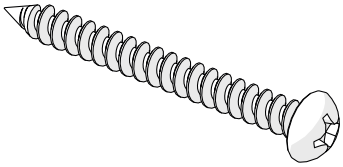

ST4.0×40
Pan Head Screw x1

NOTE

*The **Reversible Bottom Corner Bracket (#31)** is used for **Option #2** installation only! **see Page 10.**

©2019 DreamLine® All Rights Reserved

© DreamLine® All Rights Reserved

1

Installation Steps: Option 1

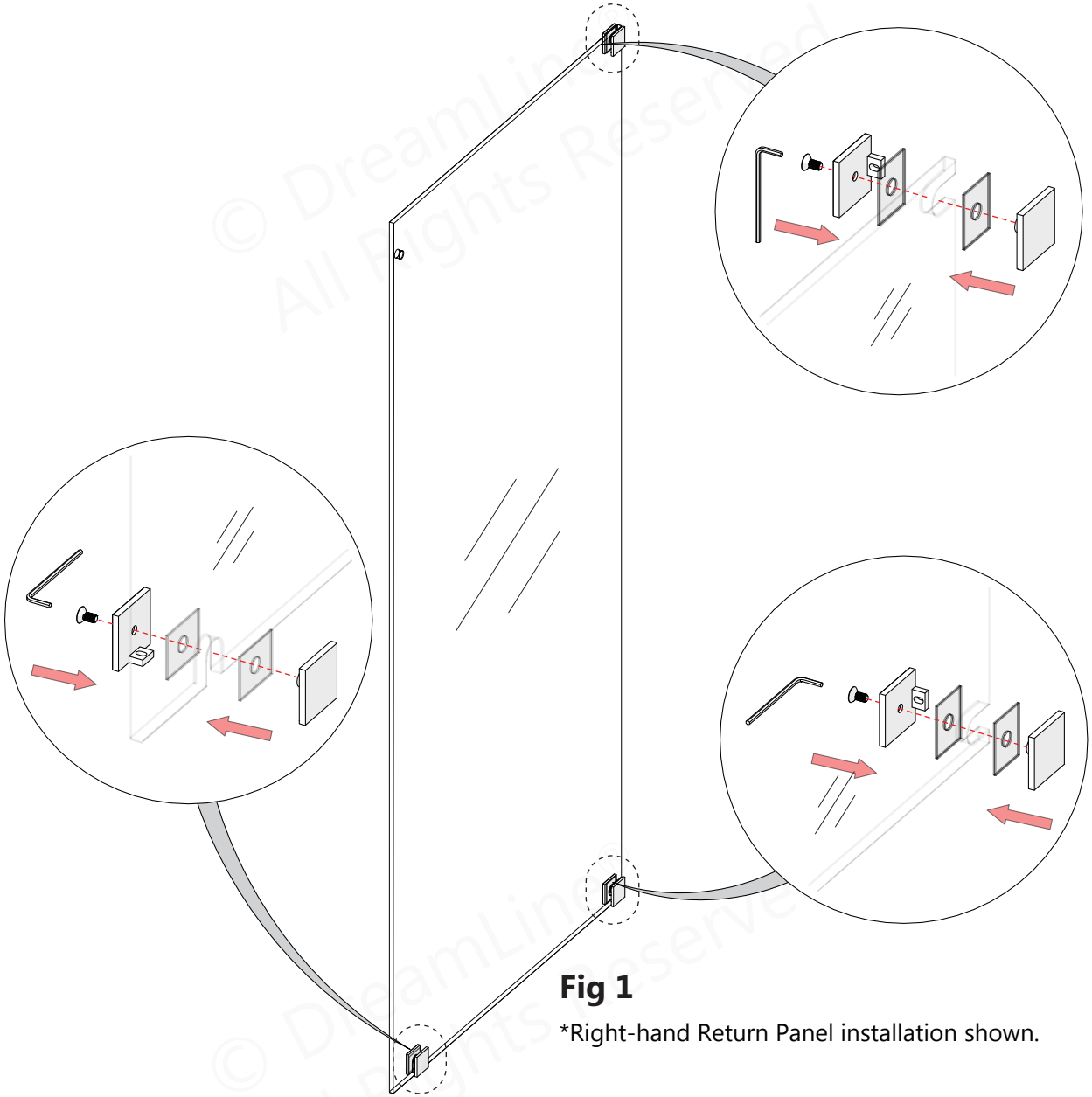

Fig 1

*Right-hand Return Panel installation shown.

Parts Needed

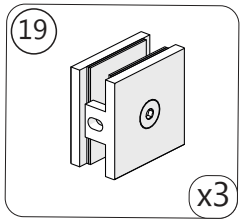

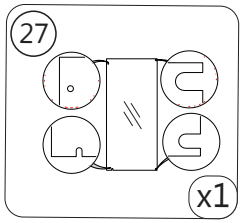

Tools Needed

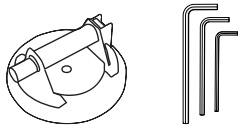

NOTE

This product is reversible for left or right-side return panel installation. The right-side return panel installation is shown as an example throughout this manual. For the left-side return panel installation, begin on the opposite wall and reverse the orientaton of the steps shown for Option 1.

© 2019 DreamLine® All Rights Reserved

2

Option 1

***see Shower Enclosure Plan for proper Return Panel Placement based on the model size**

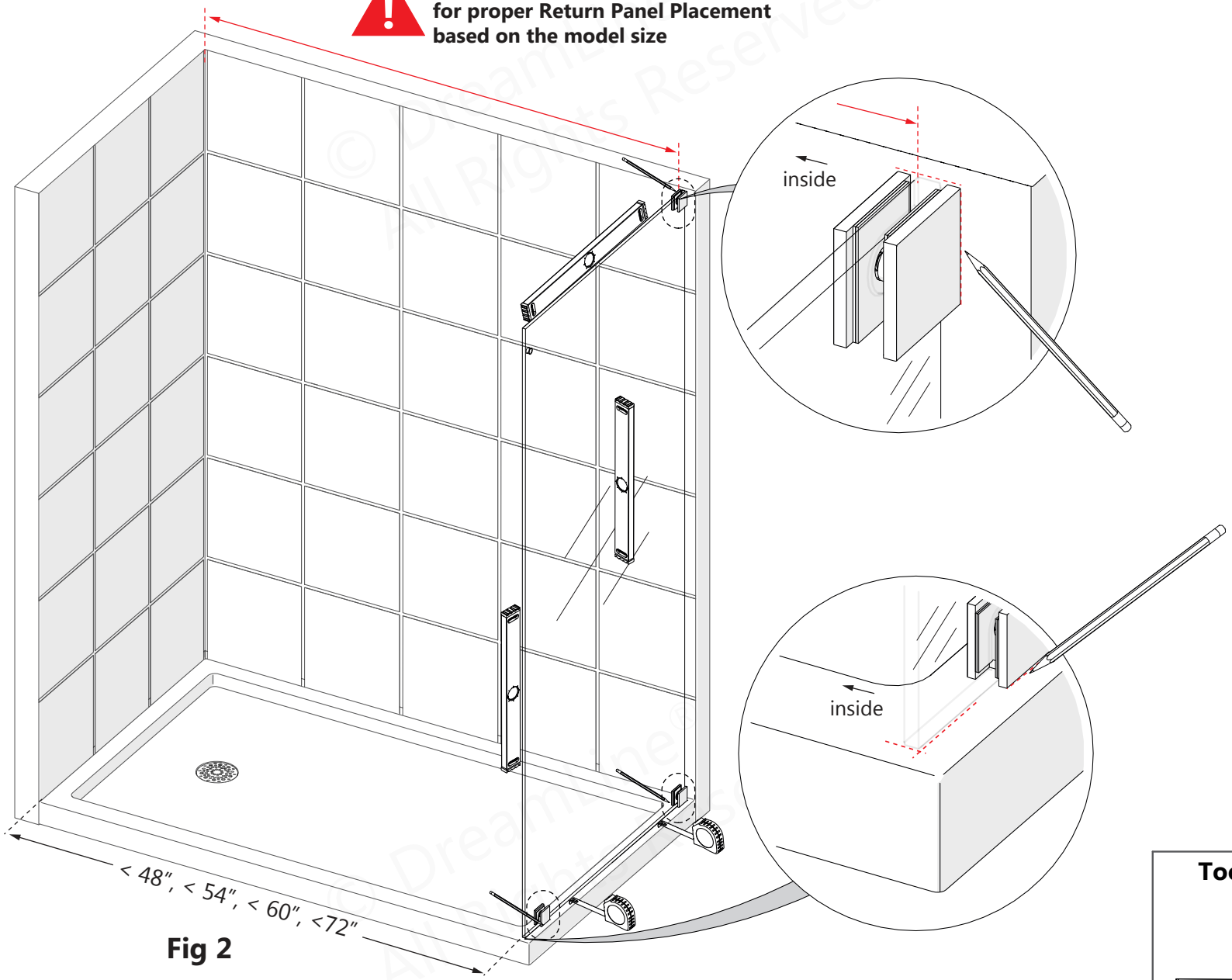

Fig 2

Tools Needed

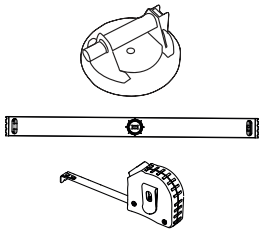

© 2019 DreamLine® All Rights Reserved

3

Option 1

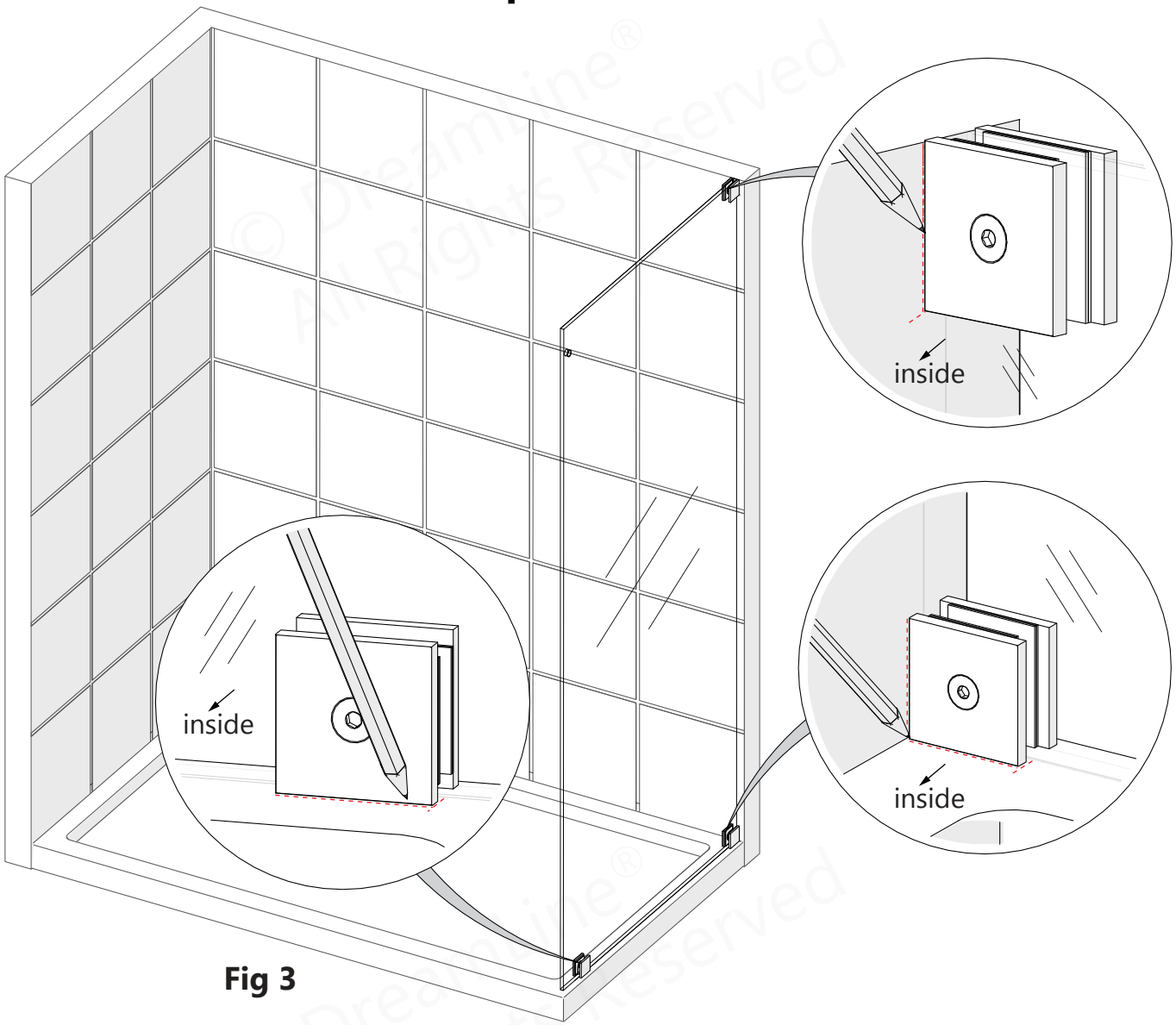

Fig 3

Tools Needed

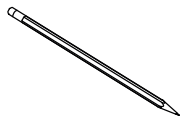

© Dreamline® All Rights Reserved

© 2019 DreamLine® All Rights Reserved

4

Option 1

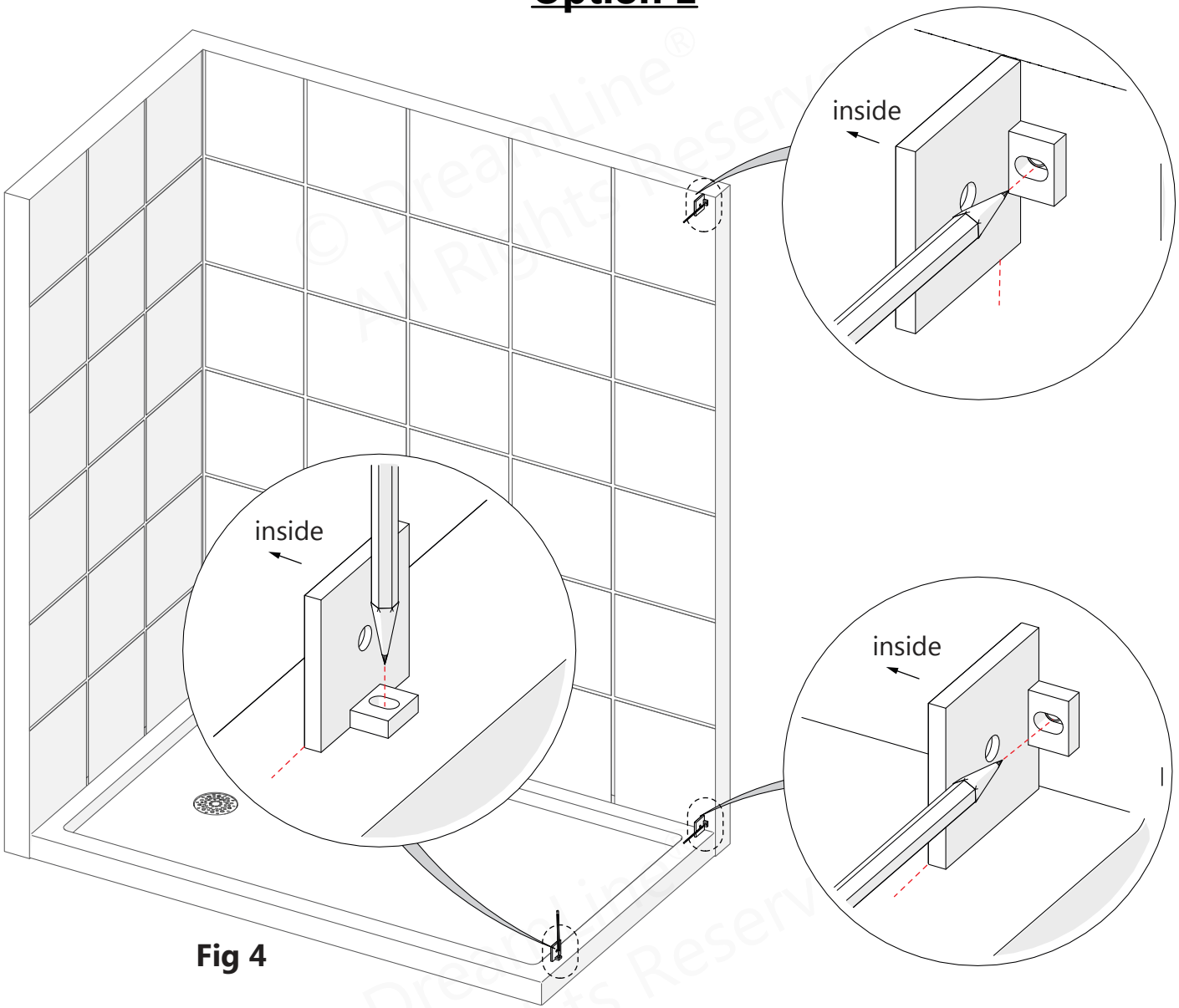

Fig 4

Tools Needed

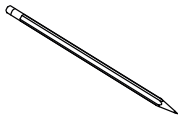

© 2019 DreamLine® All Rights Reserved

5

Option 1

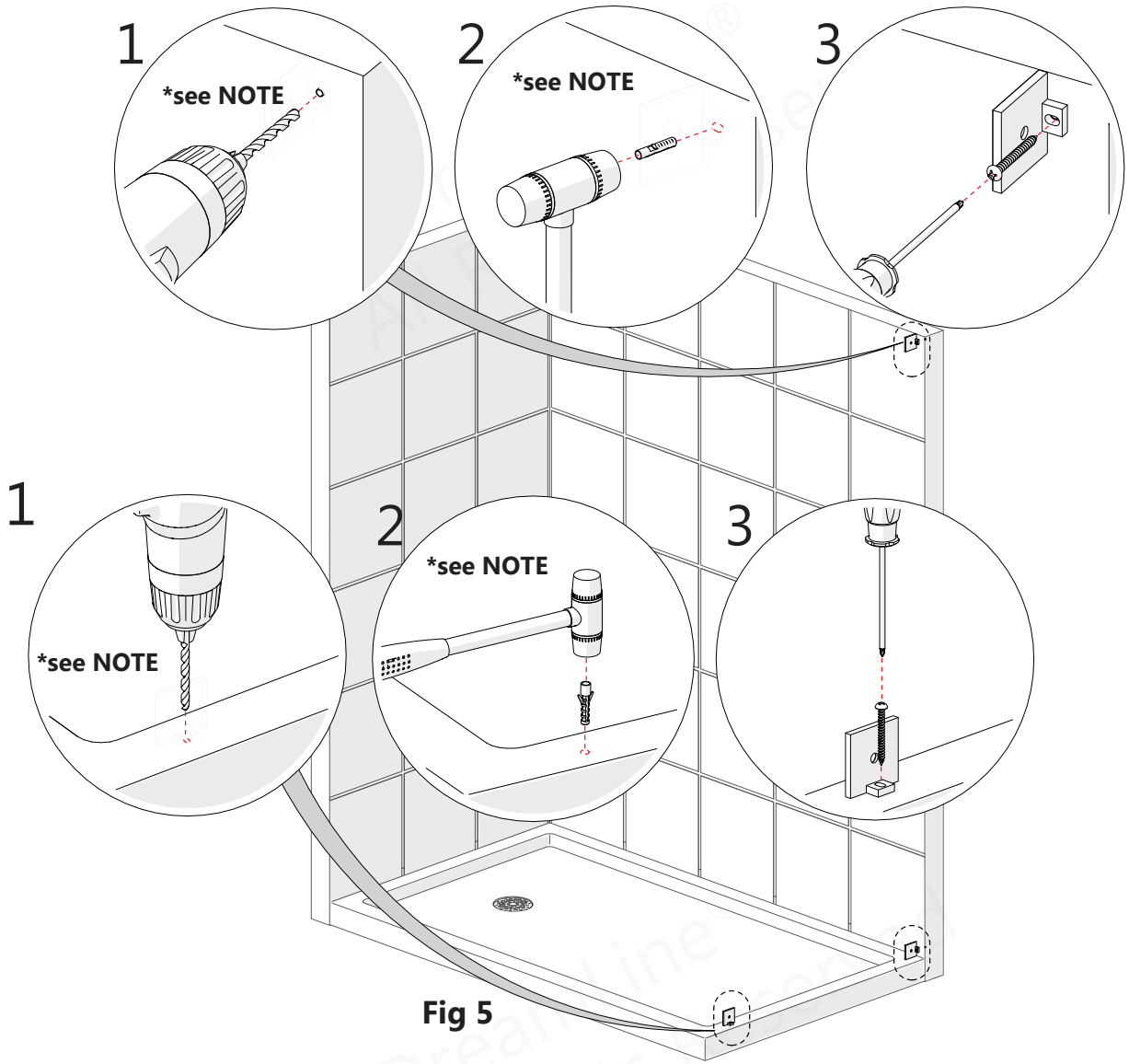

Fig 5

NOTE

- For installation into an **Acrylic Threshold**:
  drill a **Ø1/8"(3mm)** hole and use the **ST4.2 x 55mm Truss Head Screws (#18)**

OR

- For installation into a **Tile Threshold**:
  drill a **Ø3/16"(4mm)** hole to the stud, drill an **Ø1/8"(3mm)** pilot hole into the stud and use the **ST4.2 x 55mm Truss Head Screws (#18).**

NOTE

- **If a stud is present behind the wall**:
  drill a **Ø3/16"(4mm)** hole up to the stud, drill an **Ø1/8"(3mm)** pilot hole into the stud and use the **ST4.2 x 55mm Truss Head Screws (#18)**

OR

- **If no stud is present behind the wall**:
  drill a **Ø5/16"(7mm)** hole and insert a **Wall Anchor (#09b)**, and use the **ST4.2 x 55mm Truss Head Screws (#18).**

Parts Needed

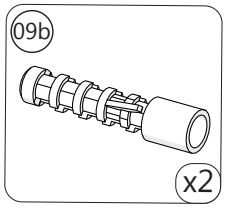

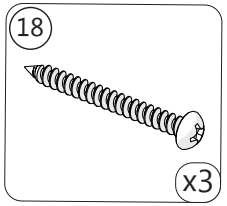

Tools Needed

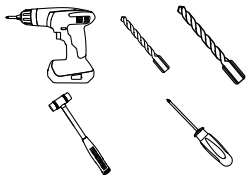

© 2019 DreamLine® All Rights Reserved

6

Option 1

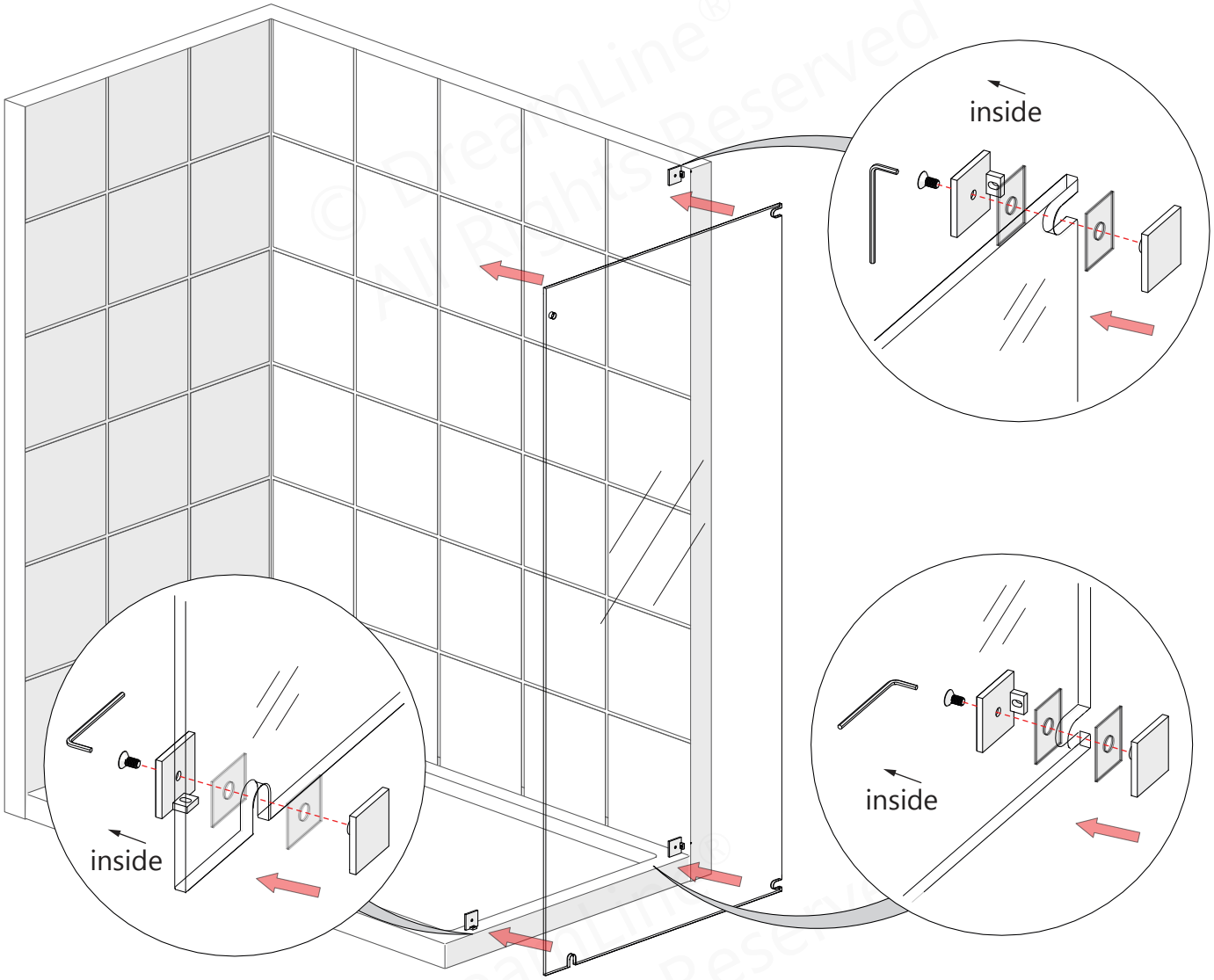

Fig 6

Tools Needed

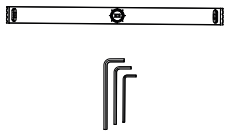

© DreamLine® All Rights Reserved

7

Option 1

NOTE **The surfaces need to be clean and free of debris before applying silicone.**

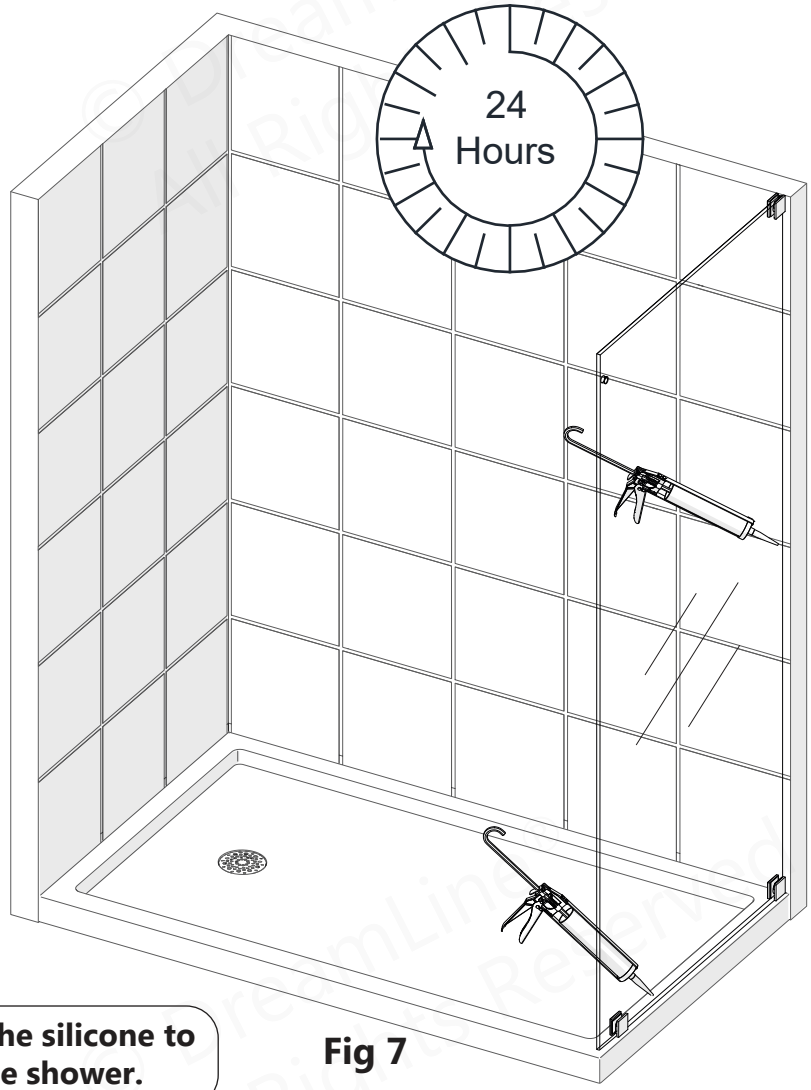

Fig 7

Allow 24 hours for the silicone to cure before using the shower.

STOP **Continue with the installation of the Enigma-X or Enigma-XO Shower Enclosure using the manual that is packaged with the Shower Door Glass.**

Tools Needed

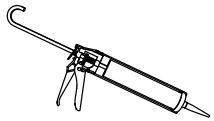

© 2019 DreamLine® All Rights Reserved

1

Installation Steps: Option 2

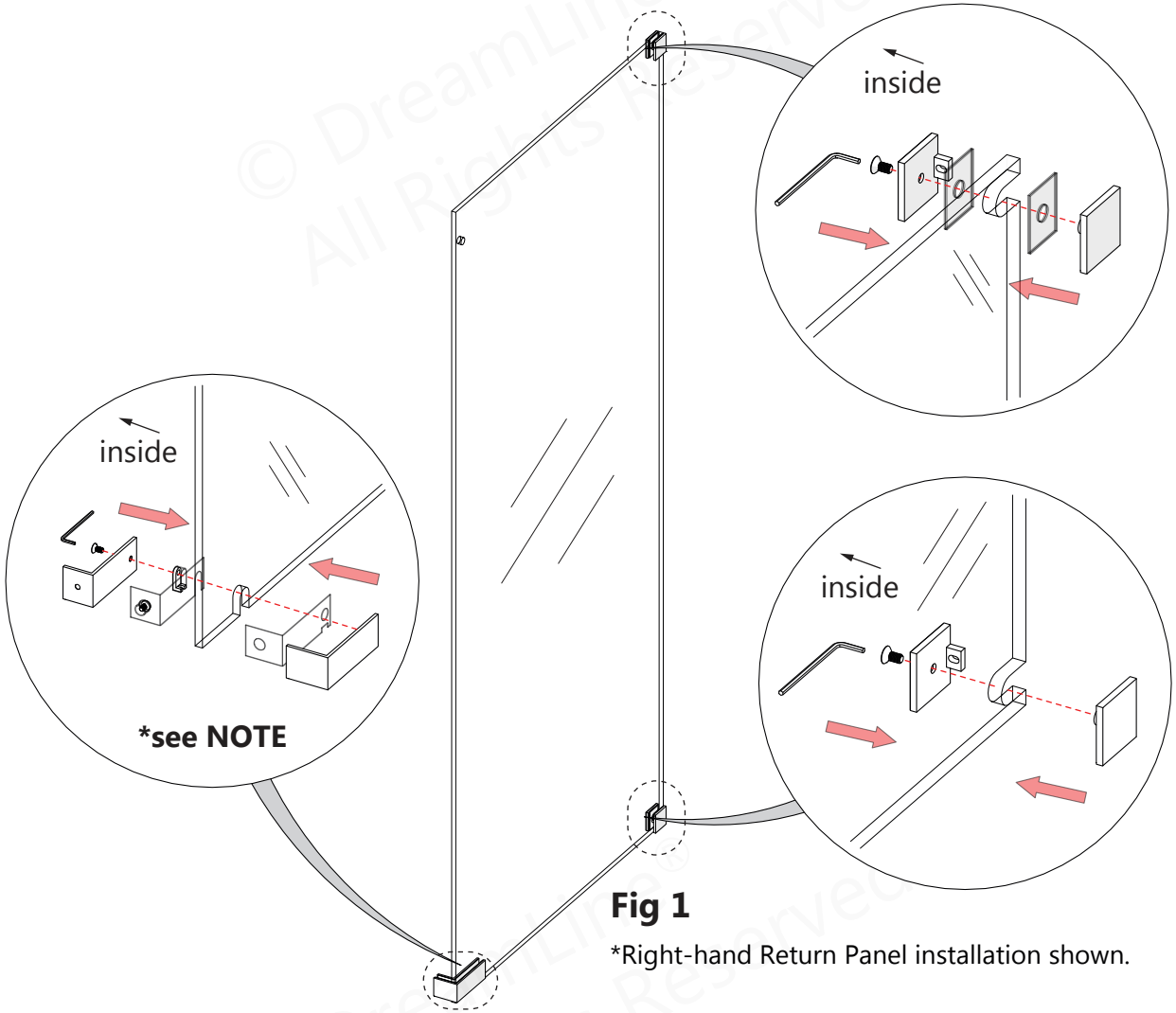

Fig 1

*Right-hand Return Panel installation shown.

Parts Needed

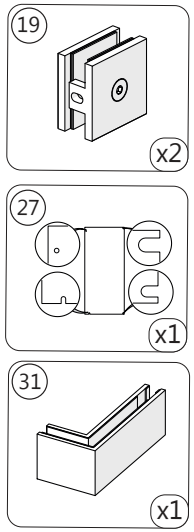

Tools Needed

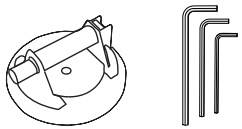

NOTE

The **Bottom Corner Bracket (#31)** is reversible for left or right-side return panel installation. Throughout this manual, the right-side orientation for this item is shown as an example. For the left-side placement, refer to **Reversible Corner Bottom Bracket Feature** on **page 27** and reverse the orientaton of the steps shown for Option 2.

© 2019 DreamLine® All Rights Reserved

2

Option 2

***see Shower Enclosure Plan for proper Return Panel Placement based on the model size**

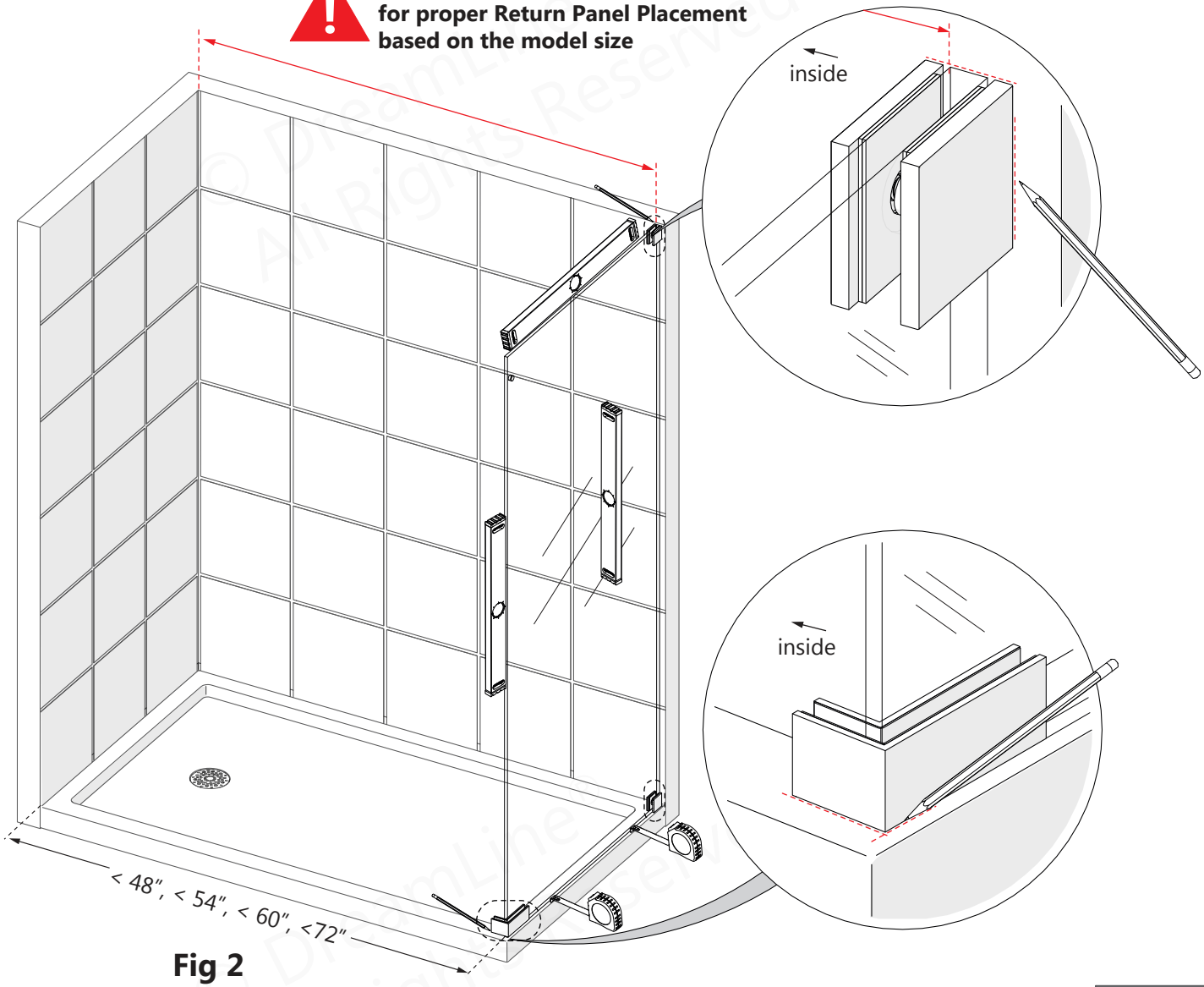

Fig 2

Tools Needed

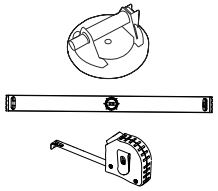

© 2019 DreamLine® All Rights Reserved

3

Option 2

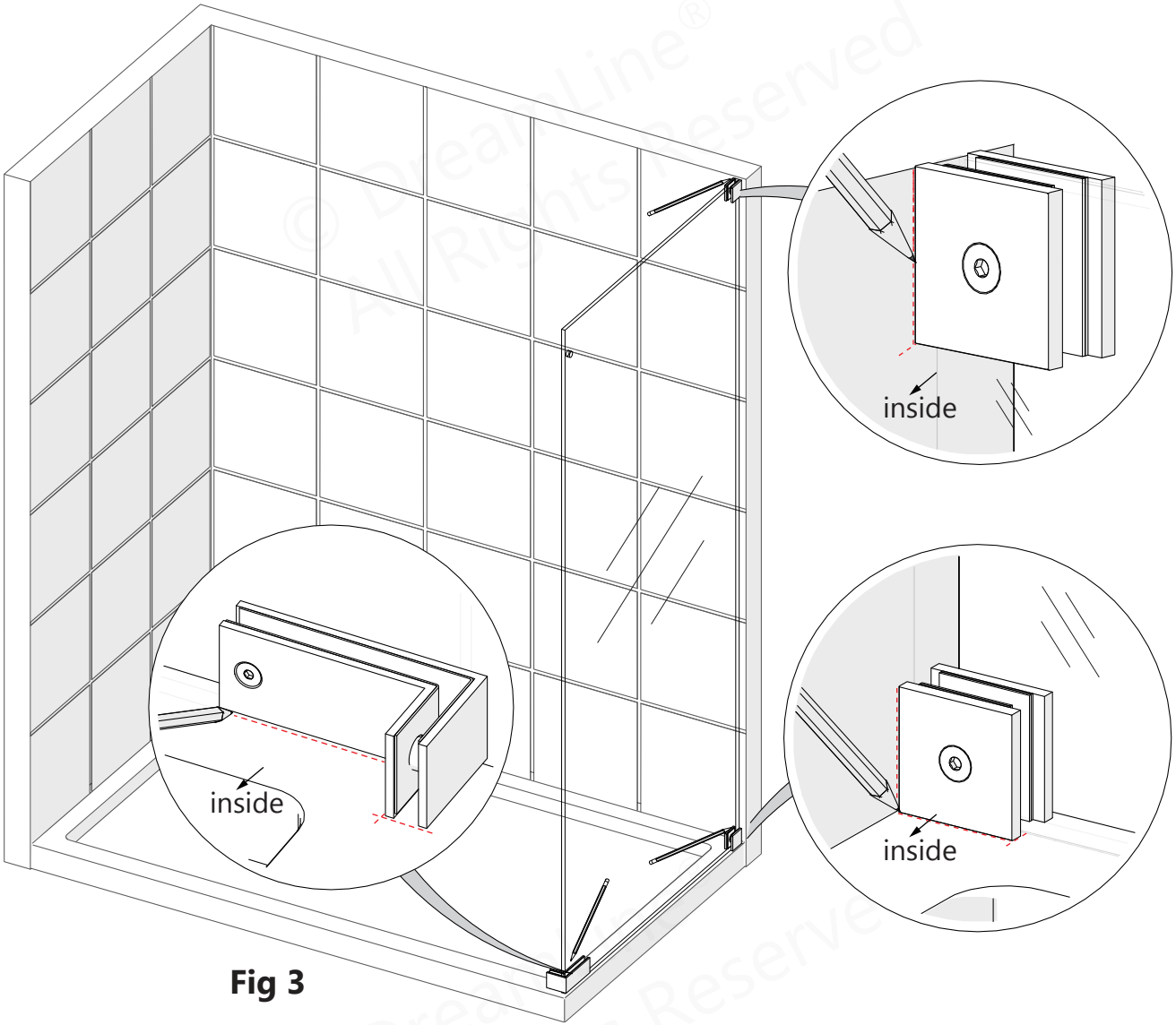

Fig 3

Tools Needed

© 2019 DreamLine® All Rights Reserved

4

Option 2

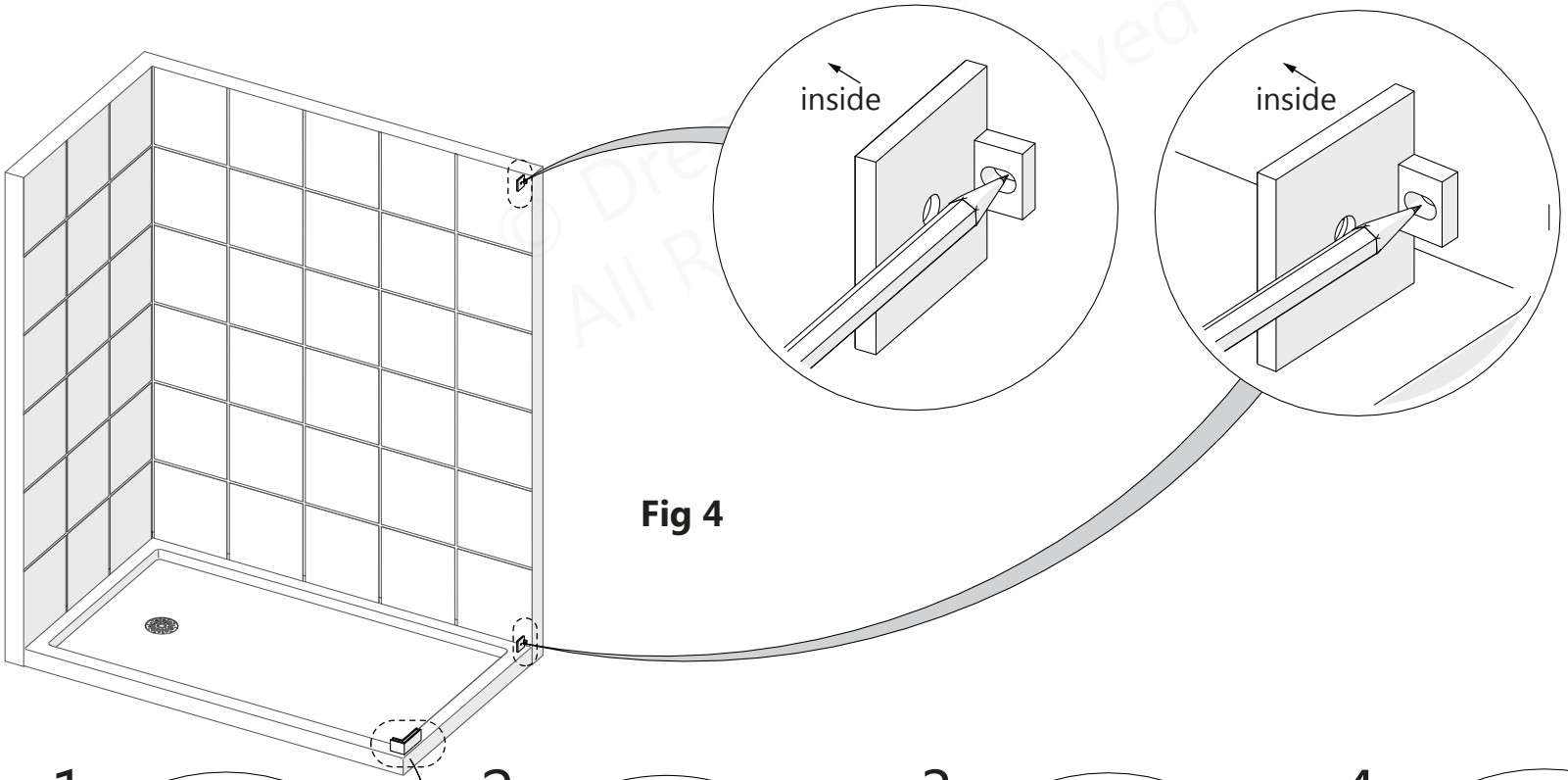

Fig 4

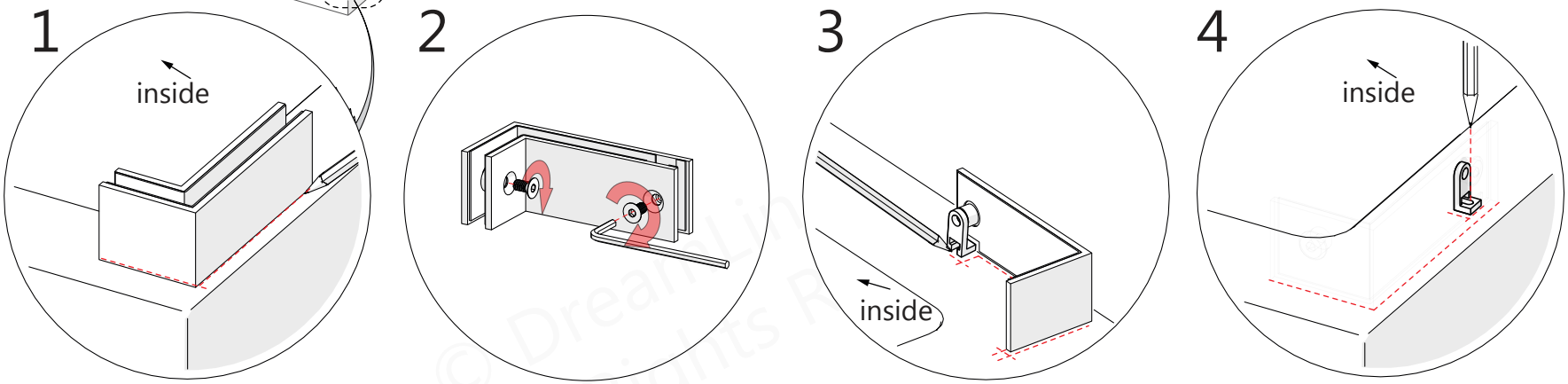

Tools Needed

© 2019 DreamLine® All Rights Reserved

5

Option 2

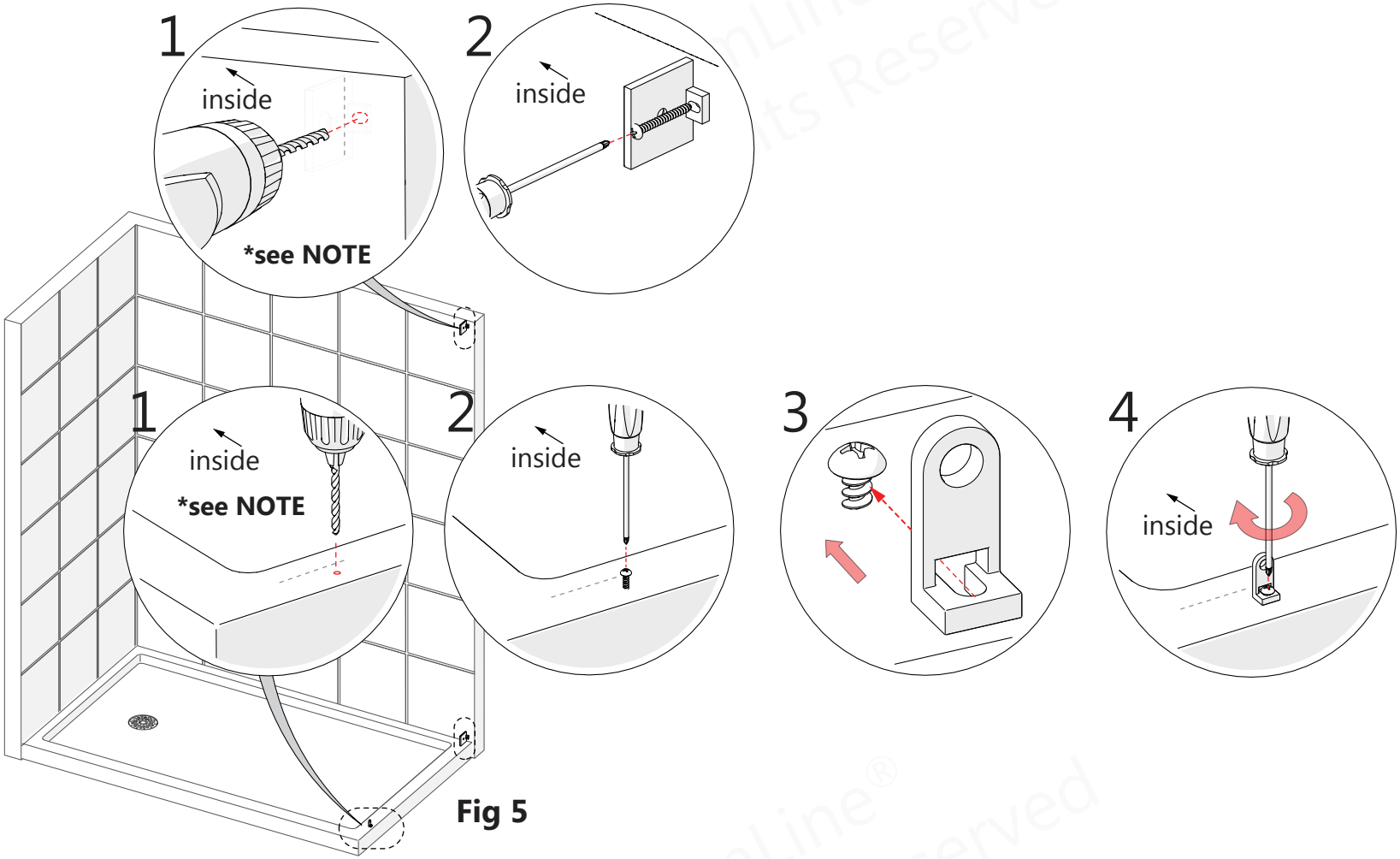

Fig 5

Parts Needed

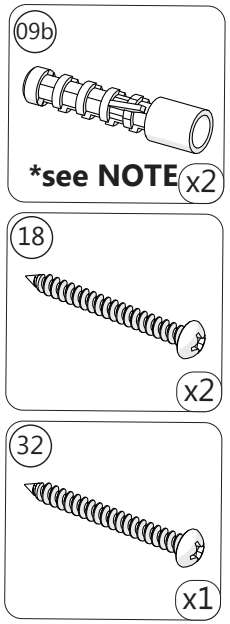

Tools Needed

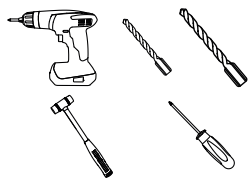

NOTE

- For installation into an **Acrylic Threshold**: drill a **Ø1/8"(3mm)** hole and use the **ST4.0 x 40mm Pan Head Screw(#32)**

OR

- For installation into a **Tile Threshold**: drill a **Ø3/16"(4mm)** hole to the stud, drill an **Ø1/8"(3mm)** pilot hole into the stud and use the **ST4.0 x 40mm Pan Head Screws (#32).**

NOTE

- **If a stud is present behind the wall**: drill a **Ø3/16"(4mm)** hole up to the stud, drill an **Ø1/8"(3mm)** pilot hole into the stud and use the **ST4.2 x 55mm Truss Head Screws (#18)**

OR

- **If no stud is present behind the wall**: drill a **Ø5/16"(7mm)** hole and insert a **Wall Anchor (#09b)**, and use the **ST4.2 x 55mm Truss Head Screws (#18).**

© 2019 DreamLine® All Rights Reserved

6

Option 2

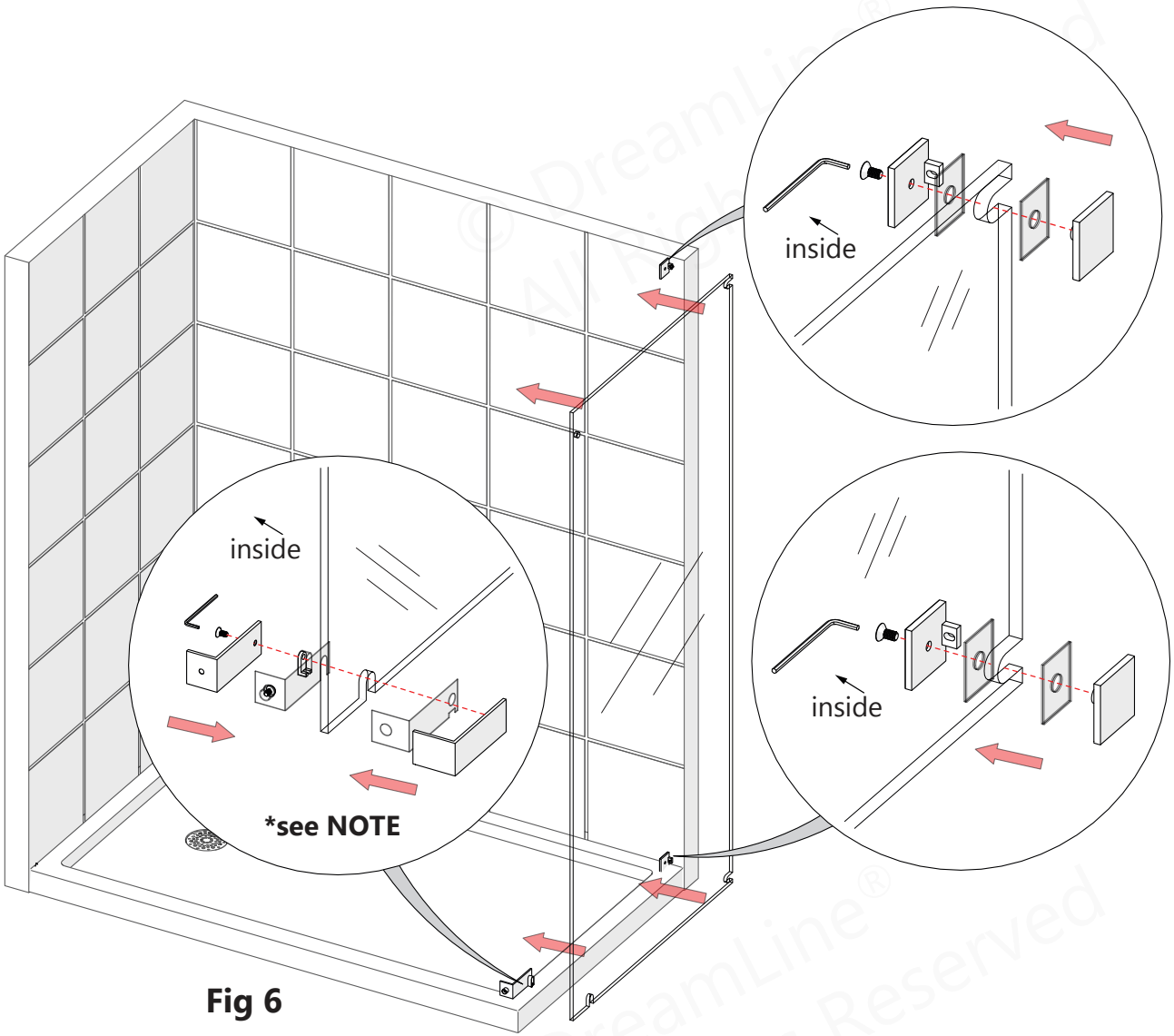

Fig 6

NOTE **The 1mm PVC Glass Spacer for the Bottom Corner Bracket is shipped flat, this piece must be folded over the top of the floor bracket when installing the glass.**

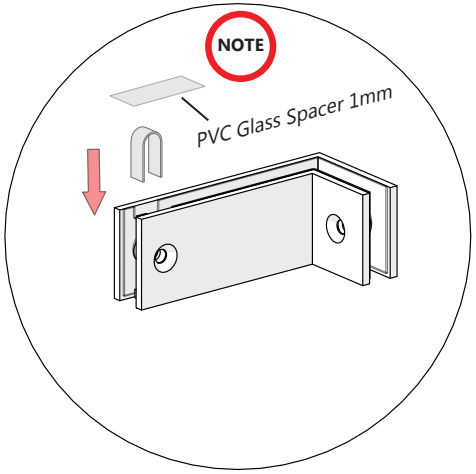

NOTE

The two screws and the backplate for the **Reversible Bottom Corner Bracket (#31)** will need to be removed to install the Inline Panel Glass during the door installation.
Once installed, tighten the short leg screw **first**, securing the Inline Panel, then the screw on the long leg securing the **Return Panel Glass (#27)**.

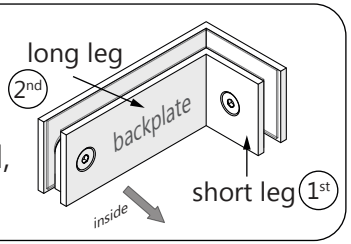

Tools Needed

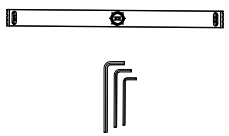

© 2019 DreamLine® All Rights Reserved

7

Option 2

NOTE **The surfaces need to be clean and free of debris before applying silicone.**

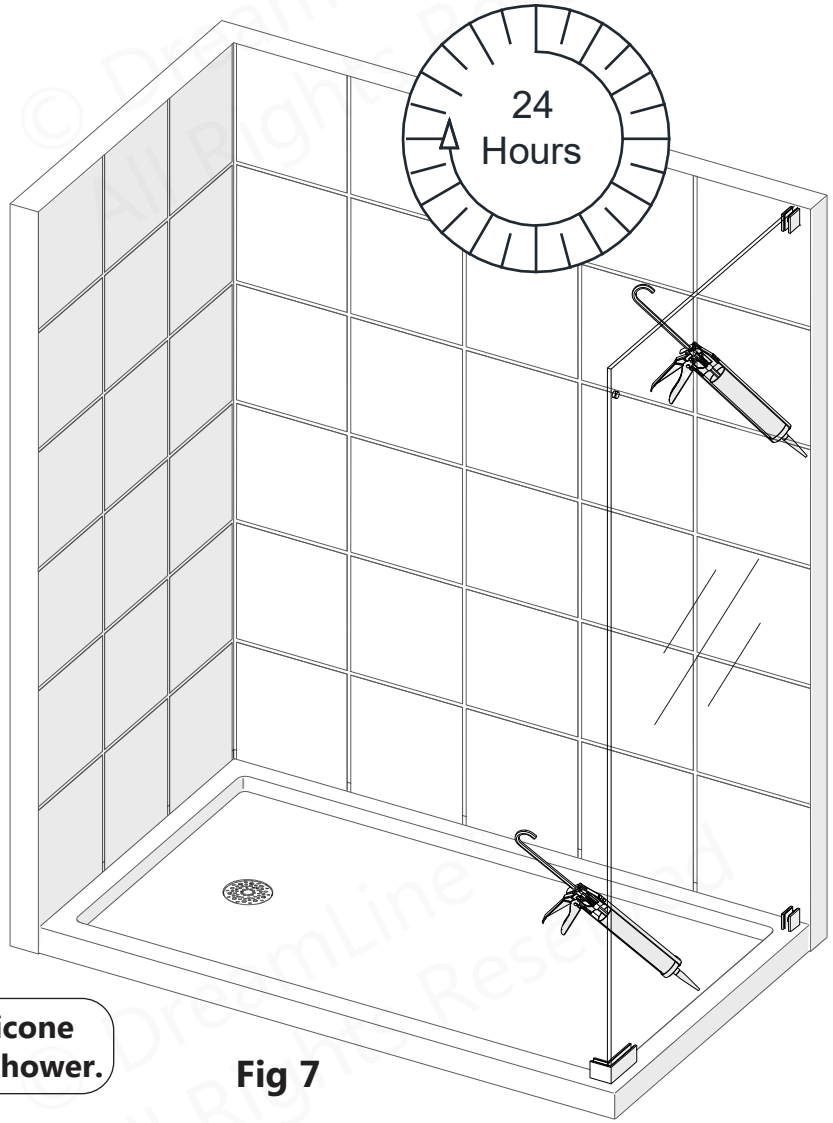

Fig 7

Allow 24 hours for the silicone to cure before using the shower.

STOP **Continue with the installation of the Enigma-X or Enigma-XO Shower Enclosure using the manual that is packaged with the Shower Door Glass.**

Tools Needed

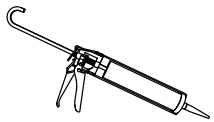

© 2019 DreamLine® All Rights Reserved

8

Review the manual that is packaged with the Shower Door Glass.
<u>Refer back to this step during the installation of the Upper Guide Rail</u> to substitute the Glass-to-Wall Guide Rail Bracket with the Glass-to-Guide Rail Connector.

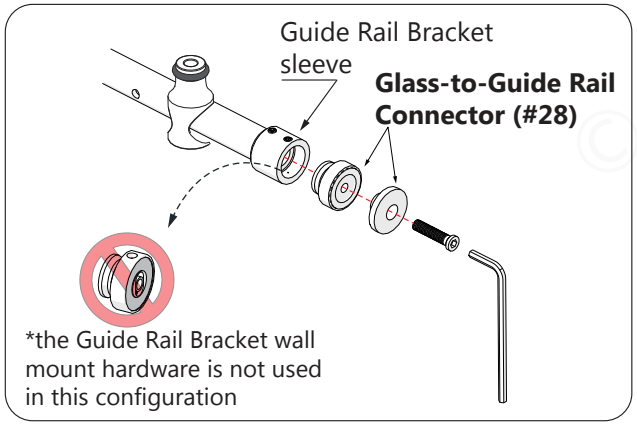

Fig 8a

NOTE

The enclosure uses the **Glass-to-Guide Rail Connector (#28)** on the Top Guide Rail to connect to the Return Panel Glass instead of the **Guide Rail Bracket wall mount hardware**. Substitute the **Glass-to-Guide Rail Connector (#28)** during the installation of the Top Guide Rail. (**see Fig 8a**)

To prevent damage and/or serious injury,
<u>DO NOT</u> lean against the installed return panel glass.

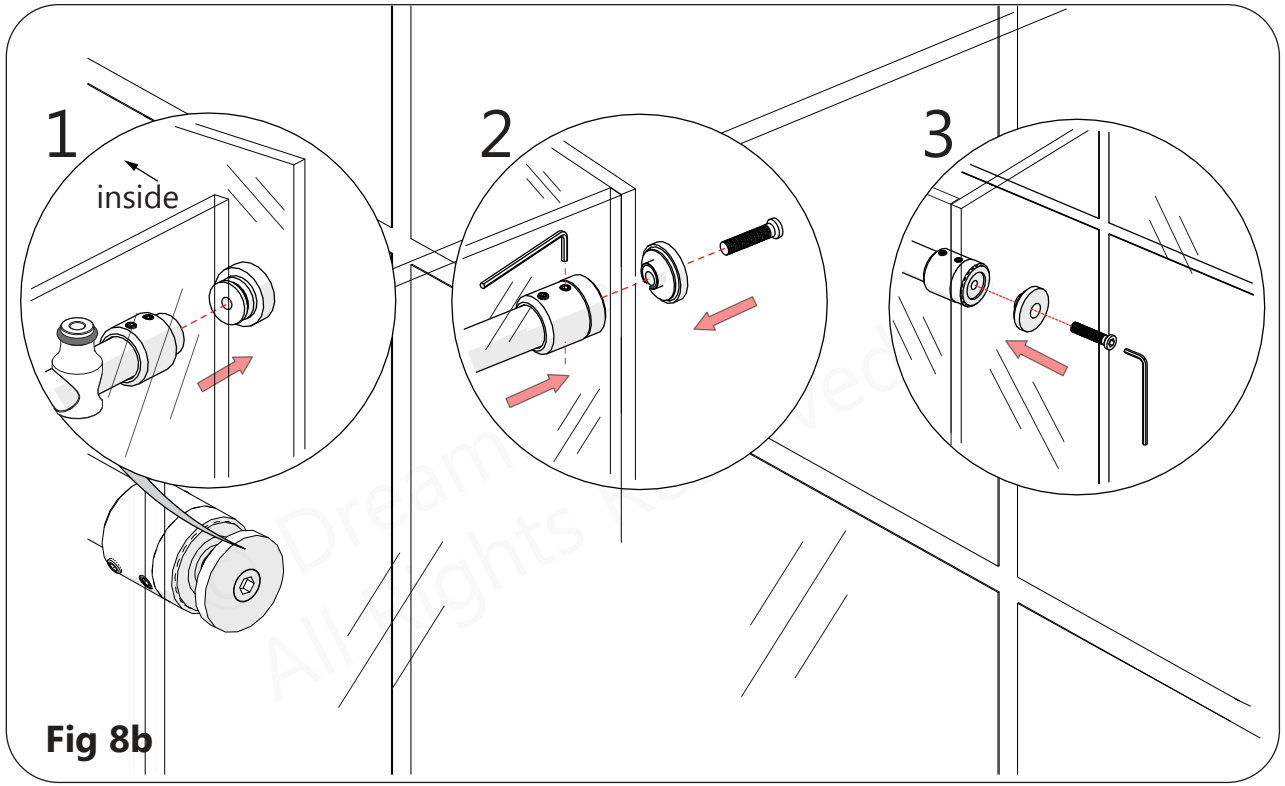

Fig 8b

Parts Needed

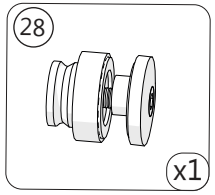

Tools Needed

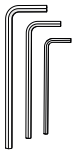

© 2019 DreamLine® All Rights Reserved

Reversible Bottom Corner Bracket Feature

1

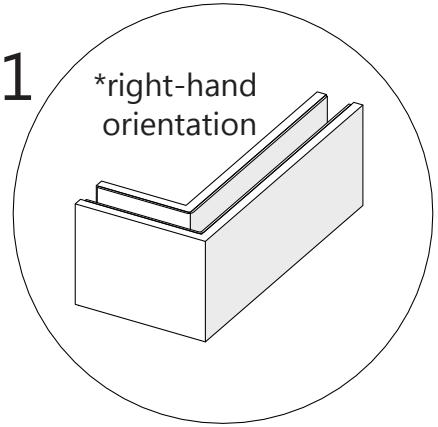

2

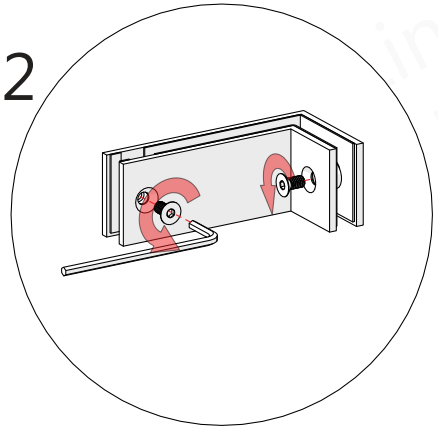

3

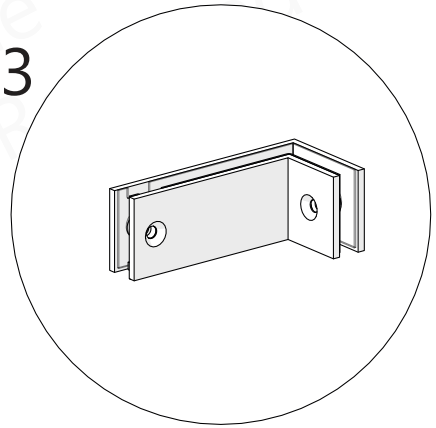

4

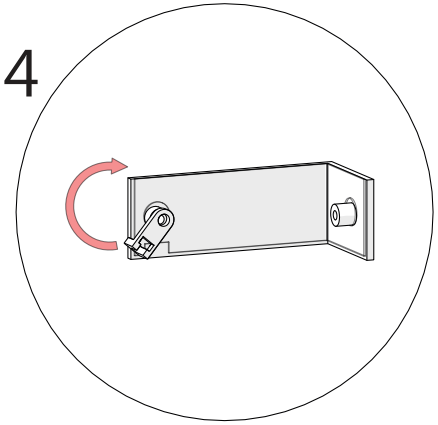

5

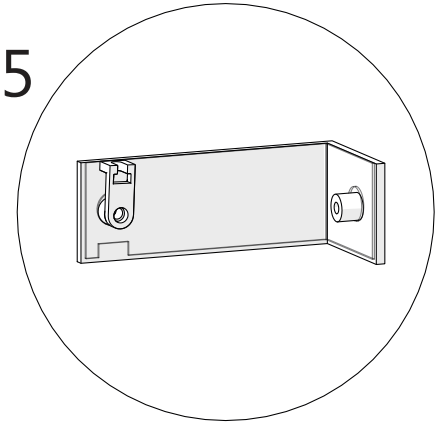

6

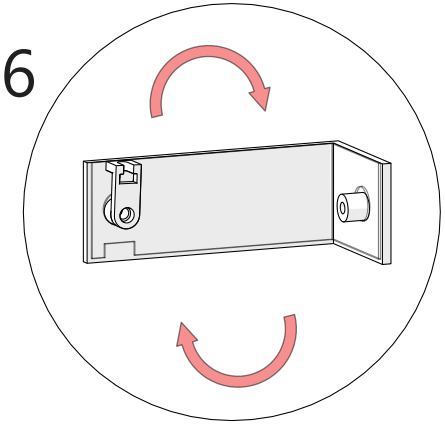

7

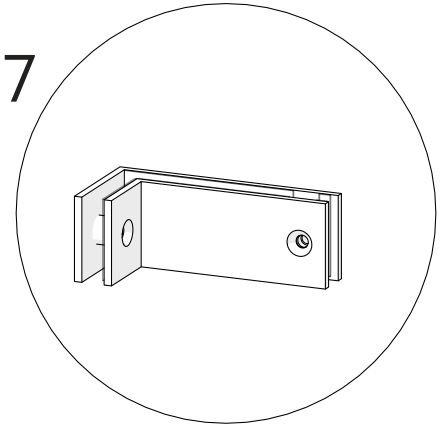

8

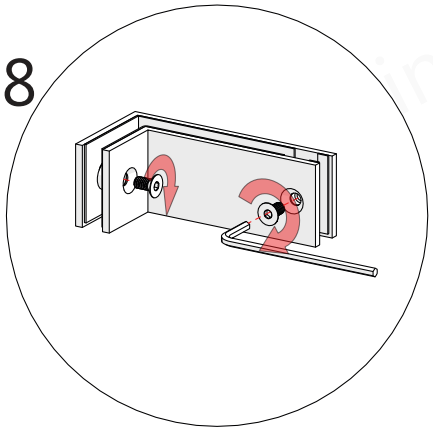

9

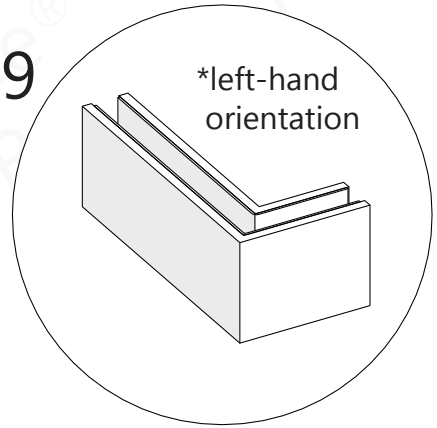

10

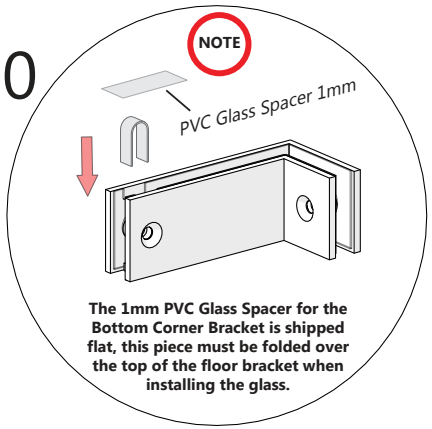

© 2019 DreamLine® All Rights Reserved

Product Maintenance

BASES and BACKWALLS: To ensure long lasting life for your acrylic back walls: wipe them off after each use with a soft cloth. To clean the acrylic back walls use non-abrasive sprays or cream based cleaners. Avoid the use of aerosol spray cleaners. Never use abrasive cleansers, metal brushes or scrapers that could permanently scratch or dull the surface.

GLASS: To ensure long lasting life for your glass shower products: wipe them off after each use with a soft cloth. Rinse and wipe off the glass using either a soft cloth or a squeegee to prevent soap buildup and water spots (Hard water can etch the surface of the glass over time if left to dry). To prevent scratching the surface: never use abrasive cleaners or cleaning products that contain scouring agents. Never use bristle brushes or abrasive sponges that may scratch the surface of the glass.

HARDWARE: To ensure a long lasting finish: wipe off all metal parts after each use with a soft cloth. Do not use abrasive cleaners or cleaning products containing ammonia, bleach or acid. If accidentally used, rinse the surface as soon as possible to prevent damage to the finish (peeling or corrosion). After cleaning the polished finishes, rinse thoroughly and wipe dry with a soft clean-cloth.
Clean stainless steel surfaces at least once a week. When applying stainless steel cleaner or polish to stainless steel hardware, work with the grain (not across the grain). Never use an abrasive sponge or cloth, steel wool or wired brush as these may permanently scratch the surfaces.

NOTE **To maximize the life of your door, it is important to regularly inspect the glass and other hardware for misalignment, proper attachment, and/or damage. Contact DreamLine® with any questions or concerns.**

ENIGMA-X / ENIGMA-XO Enclosure Return Panel Maintenance Checklist

- ☐ **Glass-to-Guide Rail Connector** bolts tight and secure
- ☐ Return Panel **Glass Bracket**(s) bolts are tight and secure
- ☐ **Reversible Bottom Corner Bracket** (if applicable) is tight to the threshold
    - ☐ **Return Panel** and **Inline Panel** glass secure
- ☐ Inspect the edges of the glass for any damage
    - ☐ **Damaged glass must be replaced!**

©2019 DreamLine® All Rights Reserved

© DreamLine® All Rights Reserved

Troubleshooting

Problem/Symptom	Suggested Solution
Missing Parts	•Check all shipping/packaging material for missing parts/components. •If not found, contact DreamLine® Customer Support [1-866-731-2244] to order factory part replacement.
Water Leakage	•Confirm the **Return Panel Glass (#27)** is tight to the threshold and the Glass Brackets (#19) bolts are tight and secured. •Confirm that the entire unit has been properly sealed with silicone caulk; allow at least 24 hours to allow the silicone to cure and set before using the shower unit. •Direct the shower head/water flow away from the area.
Return Panel Glass (#27) is loose	•Confirm the **Glass-to-Guide Rail Connector (#28)**, **Glass Bracket (#19**) and the **Reversible Corner Bottom Bracket (#31)** bolts are tight and secured to the glass, thresold and wall.
Mishandled glass	•Always take precautions when handling tempered glass. •A glass suction cup and an assistant are helpful when carrying or positioning large, heavy lites of glass. •Never allow tempered glass (especially the edges) to come in contact with any hard surface, which can cause chipping, splintering or complete glass failure. •Any damaged glass should be immediately replaced. •Do not use a shower with damaged glass. •Leave plastic corner protectors on the glass until it is necessary to remove them •Always protect the glass once removed from the box by padding the top and bottom of the glass with cardboard, styrofoam or other soft material until ready to install.

©2019 DreamLine® All Rights Reserved

© DreamLine® All Rights Reserved

TIP

Prior to contacting DreamLine® Customer Service, please have the following information readily available:

- Purchase Order Information
  - Name, PO Number, Dealer/Vendor Name, etc.
- SKU/Model Number (see Page 30)
- Factory Part Information (see Page 30)

Factory Parts Information

SHEN-GLP6111-327610
SHEN-AC6001B-(**##**)

ENIGMA-X & ENIGMA-XO Enclosure Return Panel 32"x76"		FACTORY PARTS INFORMATION	
ITEM #	**FACTORY PART NUMBER**	**ITEM DESCRIPTION**	**QTY**
09b	07552148	Wall Anchor 5/16" (8mm)	2pcs
18	090113	ST4.2 x 55mm Truss Head Screw	2pcs
19	0702**1**004 / 0702**5**004 / 0702**6**004 / 0702**9**004	Glass Bracket (with concealed screw) for 10mm (3/8) glass	3pcs
27	013016007	32" Return Panel Glass	1pc
28	0702**1**034 / 0702**5**034 / 0702**6**034 / 0702**9**034	Glass-to-Guide Rail Connector	1pc
31	0702**1**120 / 0702**4**120 / 0702**6**120 / 0702**9**120	Reversible Bottom Corner Bracket for 10mm (3/8in) glass	1pc
——	07021120-7	PVC Glass Spacer 11×64×1mm	1pc
32	091107	ST4.2 x 40mm Pan Head Screw	1pc

SHEN-GLP6111-347610
SHEN-AC6001B-(**##**)

ENIGMA-X & ENIGMA-XO Enclosure Return Panel 34"x76"		FACTORY PARTS INFORMATION	
ITEM #	**FACTORY PART NUMBER**	**ITEM DESCRIPTION**	**QTY**
09b	07552148	Wall Anchor 5/16" (8mm)	2pcs
18	090113	ST4.2 x 55mm Truss Head Screw	2pcs
19	0702**1**004 / 0702**5**004 / 0702**6**004 / 0702**9**004	Glass Bracket (with concealed screw) for 10mm (3/8) glass	3pcs
27	013016004	34" Return Panel Glass	1pc
28	0702**1**034 / 0702**5**034 / 0702**6**034 / 0702**9**034	Glass-to-Guide Rail Connector	1pc
31	0702**1**120 / 0702**4**120 / 0702**6**120 / 0702**9**120	Reversible Bottom Corner Bracket for 10mm (3/8in) glass	1pc
——	07021120-7	PVC Glass Spacer 11×64×1mm	1pc
32	091107	ST4.2 x 40mm Pan Head Screw	1pc

BOLD digit indicates finish color:
1 or 8 = Polished SS
4 or 5 or 7 = Brushed SS
6 = Oil Rubbed Bronze
9 = Satin Black

Contact **Support@DreamLine.com** for Part replacement, installation assistance or additional information.
Complete **Warranty** information is available on **DreamLine.com**.

© 2019 DreamLine® All Rights Reserved

© DreamLine®
All Rights Reserved

DREAMLINE®
dream in style

© DreamLine®
All Rights Reserved

TEL: 866-731-2244
FAX: 866-857-3638
DREAMLINE.COM

For more information on DreamLine® Shower Doors and Enclosures please visit **DreamLine.com**

©2019 DreamLine® All Rights Reserved

ENIGMA-XO

Shower and Tub Door Installation Instructions

PLEASE REVIEW THIS ENTIRE MANUAL PRIOR TO INSTALLATION

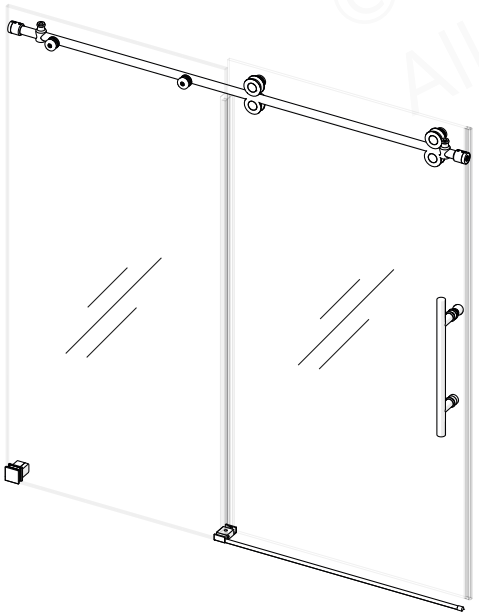

SHDR-61606220-##

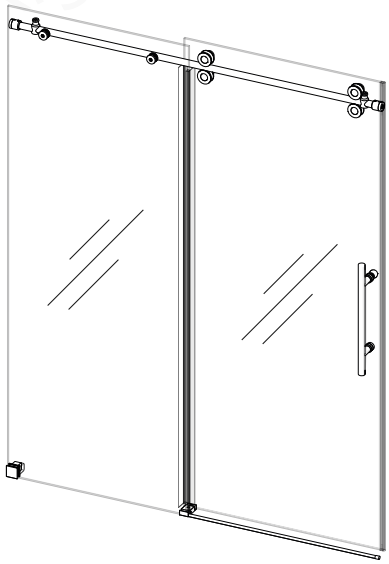

SHDR-61487620-##
SHDR-51547620-##
SHDR-61607620-##

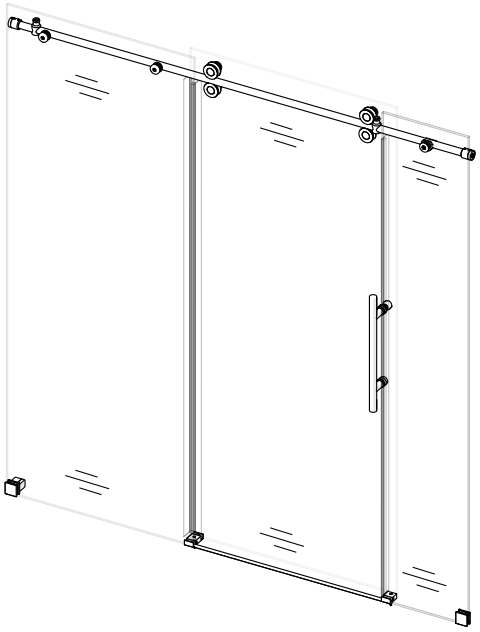

SHDR-61727620-##

##=finish
06- Oil Rubbed Bronze
07- Brushed Stainless Steel
08- Polished Stainless Steel
18- Tuxedo
09- Satin Black

IMPORTANT!
DreamLine® reserves the right to alter, modify or redesign products at any time without prior notice for the purpose of product improvement and customer experience. Please refer to the model's web page on **DreamLine.com** for the latest technical drawings, installation manuals, warranty information or additional product details.

Do Not Return Product to the Store. Contact DreamLine® with any questions

Questions?

*Please Call **DreamLine** Customer Support:* **1-866-731-2244**
Hours of Operation M-F 8AM - 6PM EST

Support@DreamLine.com

©2019 DreamLine® All Rights Reserved

©2019 DreamLine® All Rights Reserved

DREAMLINE®
dream in style

CLEARMAX®

This model is treated with DreamLine's exclusive ClearMax™ Glass technology. This is a specially formulated coating that prevents the build up of soap and water spots.

Install the surface with the ClearMax™ label towards the inside of the shower. Please note that depending on the model, the glass may be coated on either one or both surfaces.

For best results, squeegee the glass after each use and dry with a soft cloth.

Record the following purchase information for your records or in the event you need to contact DreamLine®:

Purchase Order Number _____

Installation Date _____

Installed By: _____

Store/Vendor Purchased From _____

OD Number (optional) _____
*found on the shipping box or label if available.

SKU Number _____

Table of Contents

Section Title	Page #
ClearMax® Coating Information	—
Warnings and General Preparation	2
Manual Selection	3
Important Model Information	4
Recommended Reinforcement Information	5
Model Specific Preparation	6
Tools	7
Detailed Diagram '**A**' of Shower Door Components & Parts List **A**	8-10
Detailed Diagram '**B**' of Shower Door Components & Parts List **B**	11-12
Installation Steps	13-38
Guide Block Installation	24-25
Guide Rail Bracket Adjustment	26
Upper Roller Assembly Installation	31
Lower Roller Assembly Installation	32
Roller Wheel Assembly Adjustment Procedure	33
Vinyl Seals & Handle Installation	34
Door Stopper Installation	35
SafeStop™ Bumper Installation	36,37
Product Maintenance	39
Troubleshooting	40
Factory Part Information	41-45

Symbol Legend

TIP

TIP - for ease of installation.

CORRECT - recommended.

NOTE

NOTE - take note of special feature; additional information.

INCORRECT - not recommended.

REQUIRED - requires special attention; signifies a warning.

72" MODEL ONLY

72" MODEL ONLY - denotes parts and special instruction for the 72" model only. (Not included with the 48" or 60" model.)

Average Installation Time

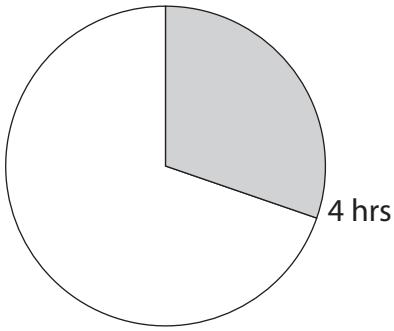

©2019 DreamLine® All Rights Reserved

©2019 DreamLine® All Rights Reserved

IMPORTANT

- DreamLine® reserves the right to alter, modify or redesign products any time without prior notice for product improvement and customer experience. Please refer to the model's web page on **DreamLine.com** for the latest technical drawings, installation manuals, warranty information or additional product details.
- This product should be installed by someone familiar with the construction requirements for this type of project and the care necessary for the safe installation and operation of the product.
- The safety of any installation is the responsibility of the installer.
- Professional installation recommended. *(All Models)*
- Professional installation required. *(Enigma Series)*
- To prevent damage or serious injury, Do Not lean against the installed panel/door/glass.
- To prevent damage or serious injury: Do Not attempt to lift or move a heavy lite of glass alone. Use an assistant and/or a professional grade glass suction cup.
- The installation of some models may require drilling down into the threshold. Contact the manufacturer of the base, tub, or threshold material with any questions regarding the drilling of holes into their product.
- All drawings in this installation manual are for illustrative purposes only and are not drawn to scale.

TEMPERED GLASS WARNING

- Your Shower Door Glass Could Shatter Without Warning if Improperly Installed or Mishandled
- Do Not install or operate a shower door if the glass has chipped corners, slivered edges or is otherwise damaged and/or has been dropped or banged into a hard surface such as tile, marble or glass.
- **The main causes of tempered glass breakage are:**
  - Improper handling, storage or installation
  - Misuse/abuse
  - Lack of maintenance
  - Failure to replace damaged glass
  - **Improper handling during storage, unpacking and installation:**
  - Corners and edges are the most susceptible area to damage on a lite of tempered glass and should be protected and handled with care during storage, unpacking, installation and operation. A concentrated point of pressure or impact with a surface harder than itself may cause the tempered glass to shatter. The tempered glass may release immediately, within several hours or even days later.
  - **Incorrect installation of door hardware, rollers, hinges, channels, stopper or glass:**
  - Improper installation may include: loose hardware and/or lack of proper gaskets between the hardware and glass. Additionally, improper alignment of guide rails, wall profiles or other hardware during installation or operation may place stress on the glass edges and cause it to break.
  - This product must be installed by a professional and experienced installer familiar with the safe handling of tempered glass.
  - **Improper use of this product:**
    - Aggressively opening or closing the door may cause trauma to the glass, which can lead to breakage. This may occur immediately or hours or even days later.
    - **The shower door hardware and glass should be inspected periodically:**
      - Instruct the homeowner how to perform a periodic inspection of the shower hardware and glass - some minor adjustments may be necessary based upon the use (or misuse) of the shower door. Ensure that the hardware remains tight and that the door alignment and operation are correct. Any adjustments should be made upon discovery to prevent damage to the product.
      - Additional considerations should be given to the installation of frameless tempered glass products in households with young children or an elderly person due to an increased chance of improper handling. In such cases, alternatives such as shower curtains or grab bars should be considered.

GENERAL PREPARATION

- After opening all boxes and packages, read this introduction carefully. Check that all the items are included in the package by marking off the components on the **"Detailed Diagram of Product Components"** page. Examine all boxes and packages for shipping damage. If the unit has been damaged, has a finishing defect, or is missing parts; please contact our Customer Support department within 3 business days of the delivery date. **Please note that DreamLine® will not replace any damaged products or missing parts free of charge after 3 business days or if the product has been installed.** Please contact DreamLine® if you have any questions.
- **Please note that you should refer to your local building codes with questions on installation compliance standards. Building and plumbing codes may vary by location, and DreamLine® is not responsible for code compliance standards for your project and will not accept any returns.**
- If this unit is going to be installed in a new construction, install all the required plumbing and drainage before installing the shower. **Use a competent and licensed (if required by local code) plumber for all plumbing installation.**
- Make sure that prior to beginning the installation, the surfaces are leveled and solid and will be able to support the total weight of the unit. Also make sure the walls are at right angles. Irregular installation surface level, radius corners or improper angle of side walls will result in serious problems for your installation. Please note that some adjustments and drilling will be necessary during the installation process.
- Protect all primary surfaces of the product during installation. Never set your glass down directly onto a tile floor. Leave corner protectors in place until it is necessary to remove them. Always use a piece of wood or cardboard to protect the bottom edge and corners of the glass prior to and during installation.
- This unit must be installed upon a finished threshold and against finished walls.
- *DreamLine® shower doors are not designed to be installed into a fiberglass surround due to the radius corners and lack of a solid surface to mount the hardware.*

WARNING: TO AVOID THE RISK OF DAMAGE OR INJURY:

- **Follow all recommendations and requirements as shown in the installation instructions.**
- Perform a thorough inspection of the glass and all parts for any damage prior to installation. Any damage to tempered glass can cause breakage.
  Do Not install damaged glass!
- Do Not install or operate a shower or tub door if the glass has chipped corners, slivered edges or is otherwise damaged. Do Not install or operate a shower or tub door that has been dropped or banged into a hard surface such as tile, marble or glass.
- **CAUTION:** Contact with any hard surface can damage tempered glass and cause it to shatter.
- This product uses tempered glass. Glass cannot be cut after it has been tempered.
  Do Not attempt to cut tempered glass.
- DreamLine® Glass Shower doors, Tub doors, Inline panels, and Return panels can shatter due to improper handling or lack of maintenance. Conduct periodic inspections of glass and all parts for possible damage, missing or loose parts.
- Always wear proper safety equipment such as: safety goggles, work gloves and appropriate footwear during the installation process.
- **WARNING. Risk of leakage and/or damage.** Follow all instructions regarding the application of silicone sealant or caulk. Allow 24 hours for the sealant to cure before the initial use of the shower or tub product. Follow the silicone manufacturer's recommendations regarding the use of their product.

- **Thoroughly read these instructions before installing or using this product.**
- **Leave this manual for the end-user of the product.**

This product should be installed by someone familiar with the construction requirements for this type of product and the care necessary for the safe installation and operation of the product.

Manual Selection

IMPORTANT! This manual will describe the installation of the single threshold model of the Enigma-XO.
Use this manual when installing the Enigma-XO single threshold model.

NOTE

<u>For the ENIGMA-XO Enclosure Installation:</u>
Start with the Enigma-X/Enigma-XO Enclosure Return Panel Manual that is packaged with the return panel glass FIRST for the installation of the return panel glass, then use this manual for the installation of the door section.

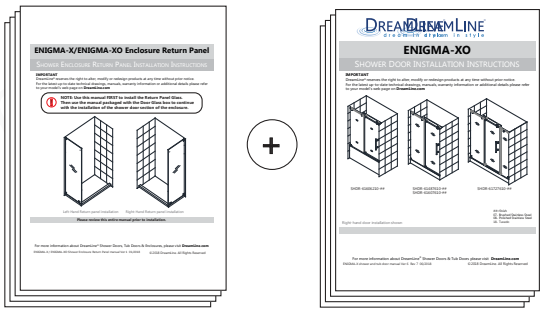

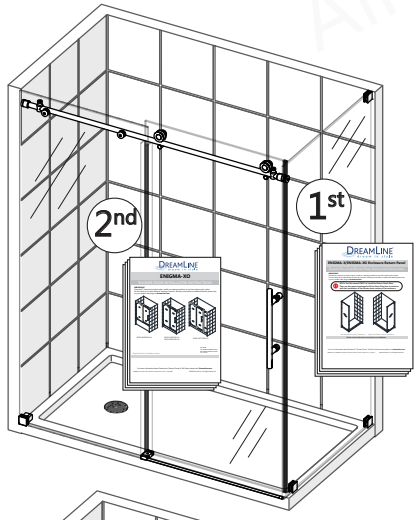

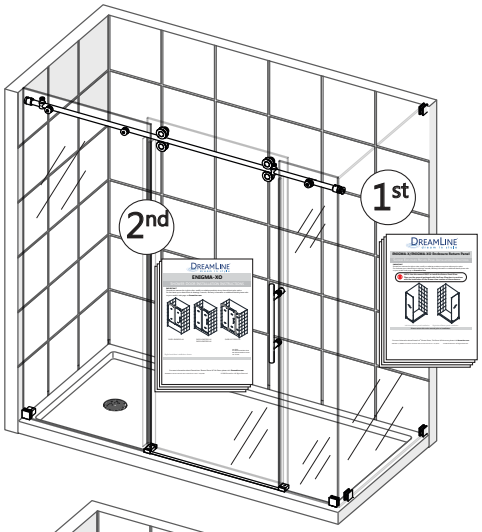

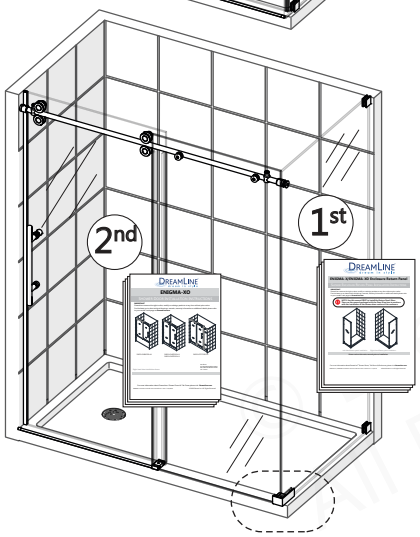

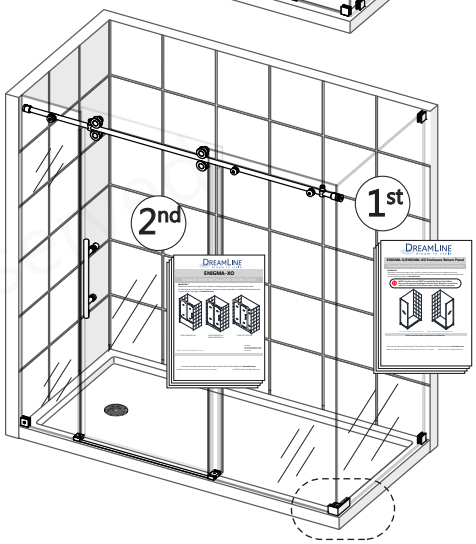

ENIGMA-XO Enclosure MODEL #s
SHEN-6132482-##
SHEN-6132542-##
SHEN-6132602-##
SHEN-6134482-##
SHEN-6134542-##
SHEN-6134602-##

ENIGMA-XO Enclosure MODEL #s
SHEN-6132722-##
SHEN-6134722-##

©2019 DreamLine® All Rights Reserved

Important Model Information

IMPORTANT INFORMATION REGARDING THE INSTALLATION OF THIS SHOWER DOOR

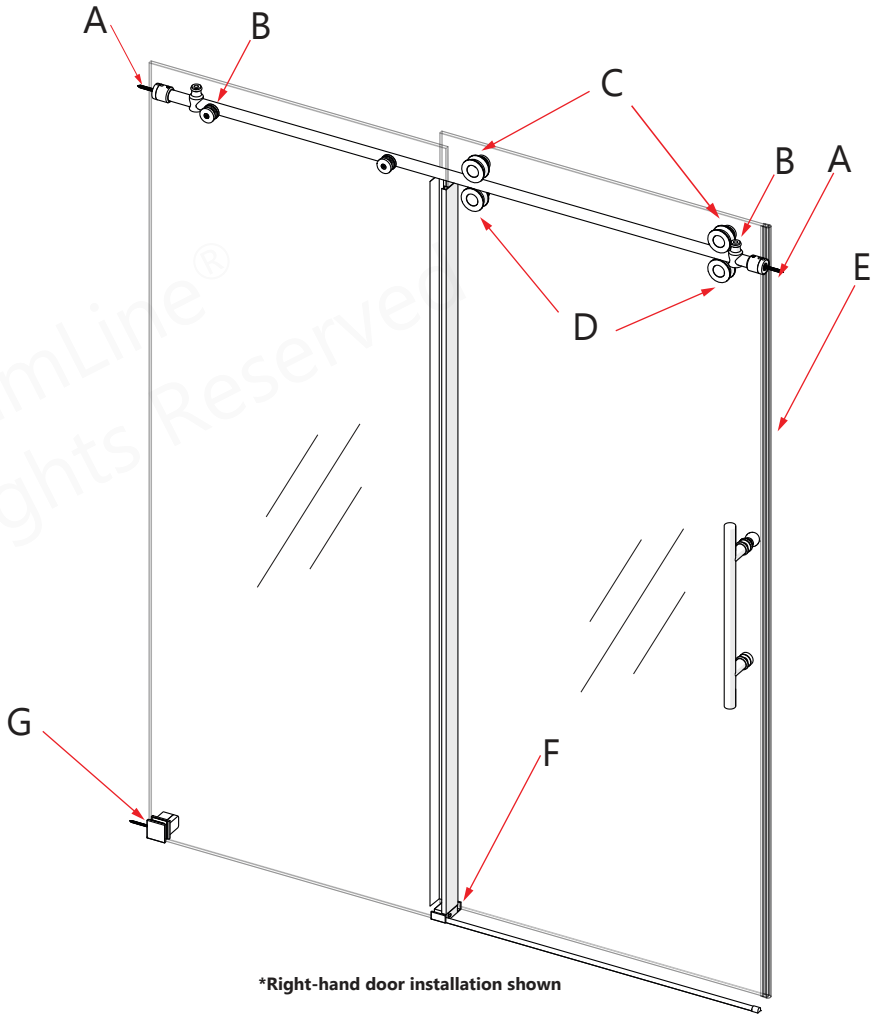

*Right-hand door installation shown

A **Guide Rail Brackets must be firmly attached to the wall**. Installation into a stud is strongly recommended.
All of the guide rail bracket set screws must be accessible and tightened.

B **Thread Lock must be applied to the set screws in both stoppers.**
Panel-side stopper must be installed into the pre-drilled stopper hole in the upper guide rail.
Door-side stopper must be installed at the proper position to prevent the door from contacting the wall.

C **Roller Wheel Assembly safety set screws: must be accessible and must be retightened with Thread Lock during installation.**

D **Lower Roller Wheel Assemblies must be adjusted during installation to make contact with the Upper Guide Rail. Tighten safety set screws. Apply thread lock.**

E **Bulb Vinyl Seal** must be installed on the closing edge of the Door Glass.

F The **Guide Block** must be screwed to the threshold and installed square with the Panel Glass and Door Glass. Installing the guide block crooked may damage the bottom edge of the Door Glass and lead to breakage.

G **SafeStop™ Bumper** must be secured in position with 3M™ tape or screwed to the wall.

PLEASE READ THE ENCLOSED INSTALLATION MANUAL FOR DETAILS REGARDING PROPER INSTALLATION.

THE LATEST VERSION OF THE INSTALLATION MANUAL IS AVAILABLE TO VIEW OR PRINT ON DREAMLINE.COM

©2019 DreamLine® All Rights Reserved

Recommended Reinforcement Information

Install studs **OR** install 2"x 6" wood blocking between the studs where the Guide Rail Brackets will attach to the wall

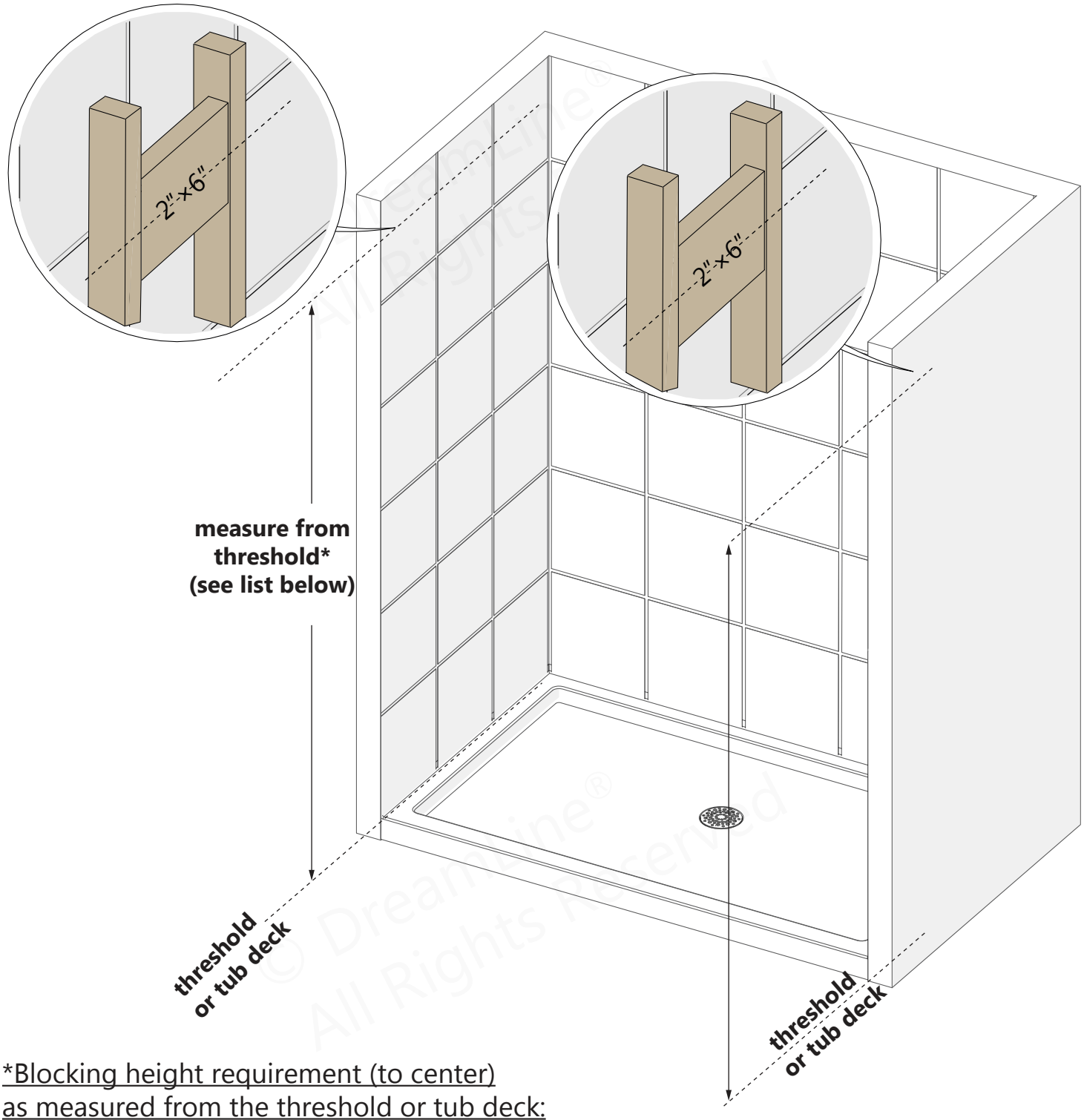

<u>*Blocking height requirement (to center)</u>
<u>as measured from the threshold or tub deck:</u>

Enigma Air / Sky = 73" for shower ht / 59" for tub ht

Enigma-X / XO = 72-1/2" for shower ht / 58-1/2" for tub ht

Enigma-Z = 73-1/2" for shower ht / 59-1/2" for tub ht

Enigma = 75-1/2" for shower ht only

©2019 DreamLine® All Rights Reserved

Model Specific Preparation

REQUIRED:

No Out-of-Plumb Adjustment; Verify threshold and walls with a level

Threshold must be level

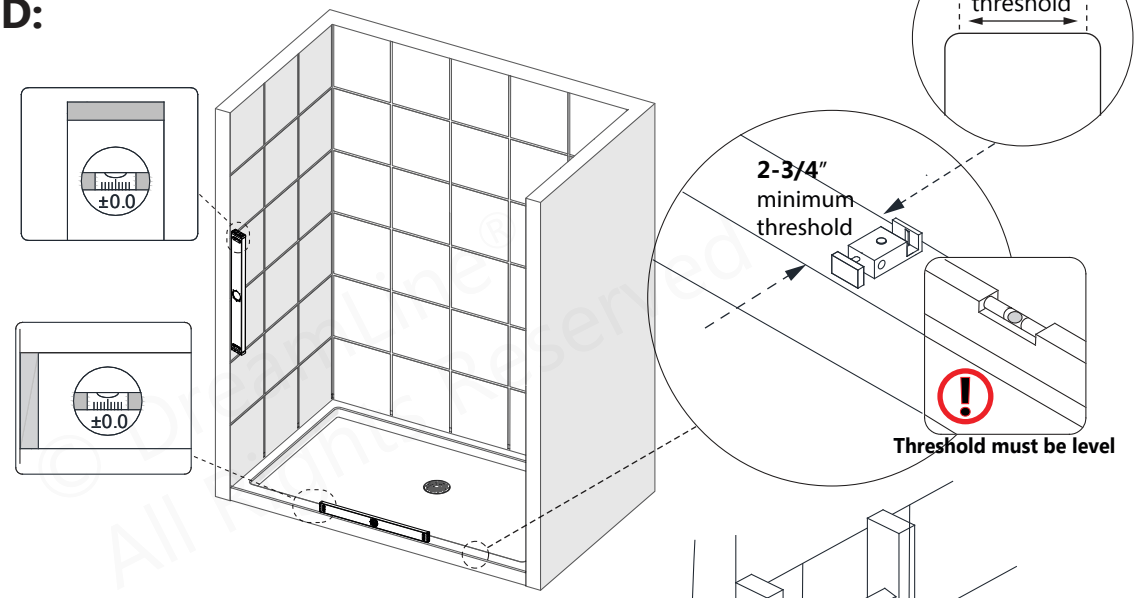

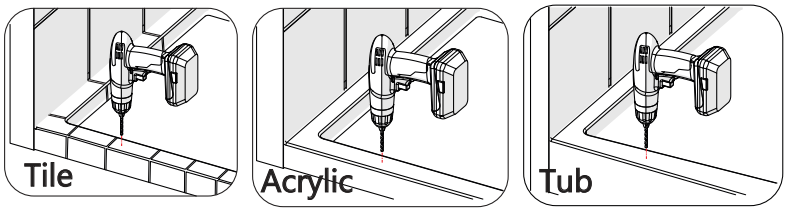

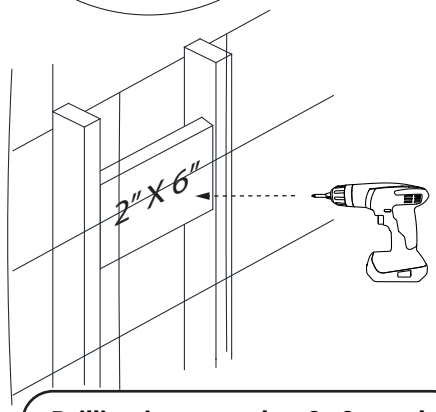

TIP Contact the manufacturer of the base, tub or threshold material with any questions regarding the drilling of holes into their product.

Drilling into a stud or 2×6 wood reinforcement is recommended.
***see page 5 for more information**

DO NOT hang or drape a towel or wash cloth over the Enigma series guide rail as this may cause the roller assemblies to get stuck and possibly cause serious damage or injury.

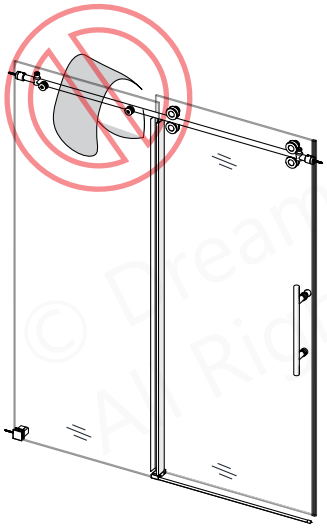

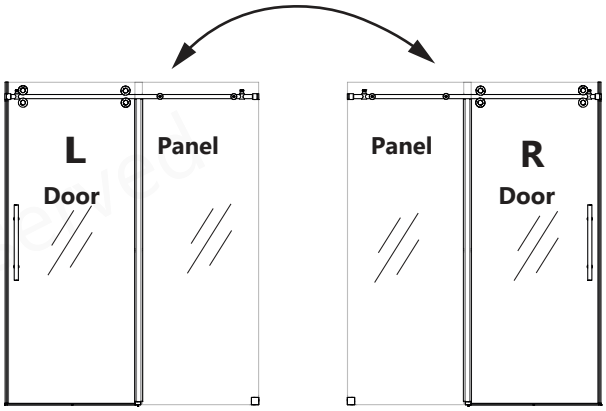

NOTE This model is reversible for right or left-hand door installation. The right-hand door installation is shown as an example throughout this manual. For the left-hand door installation, simply begin on the opposite wall and reverse the orientation of the steps shown.

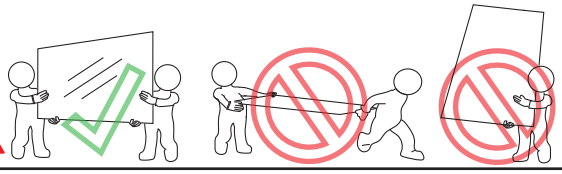

This door requires professional installation. Two installers recommended.

©2019 DreamLine® All Rights Reserved

Tools

Level

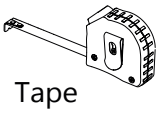
Tape Measure

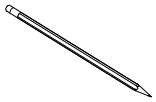
Pencil

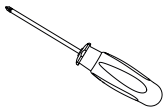
Phillips Screwdriver

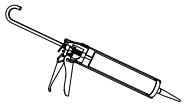
Silicone

Power Drill

Drill Bit Ø1/8" (3mm)

Drill Bit Ø3/16" (4mm)

Drill Bit Ø1/4" (6mm)

Drill Bit Ø5/16" (8mm)

Drill Bit Ø3/8" (10mm)

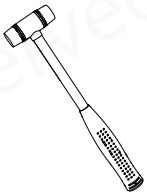
Soft Head Hammer

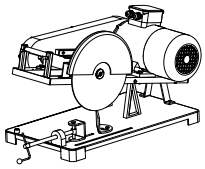
Chop saw**

Safety Glasses

Work Gloves

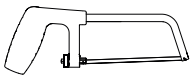
Hacksaw**

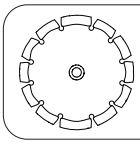

**Use the proper saw blade to cut stainless steel.

Painter's Tape

Razor Knife

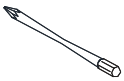
Extender Driver Bit

#3 Phillips Driver Bit

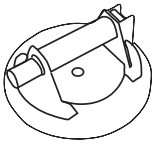
Professional-grade Glass suction cup

Threshold must be level; Walls must be plumb.

Measure the finished opening before proceeding with the installation to be sure that the correct model size has been ordered.

Be sure to cover the shower drain to prevent losing small parts.

Unpack your unit carefully and inspect it. Lay it out and identify all parts using the **Detailed Diagram(s)** on pages **8** and **11**; and packing list in this manual as a reference. Before discarding the carton, check for small hardware bags that may have fallen to the bottom of the box. If any parts are damaged or missing, please contact DreamLine® for replacement. The shipping boxes may contain extra parts not used in your model configuration. Retain these installation instructions for future reference.

These instructions will show the installation of the shower door. Please follow the same steps for the installation of the tub door.

©2019 DreamLine® All Rights Reserved

Detailed Diagram 'A' of Shower Door Components

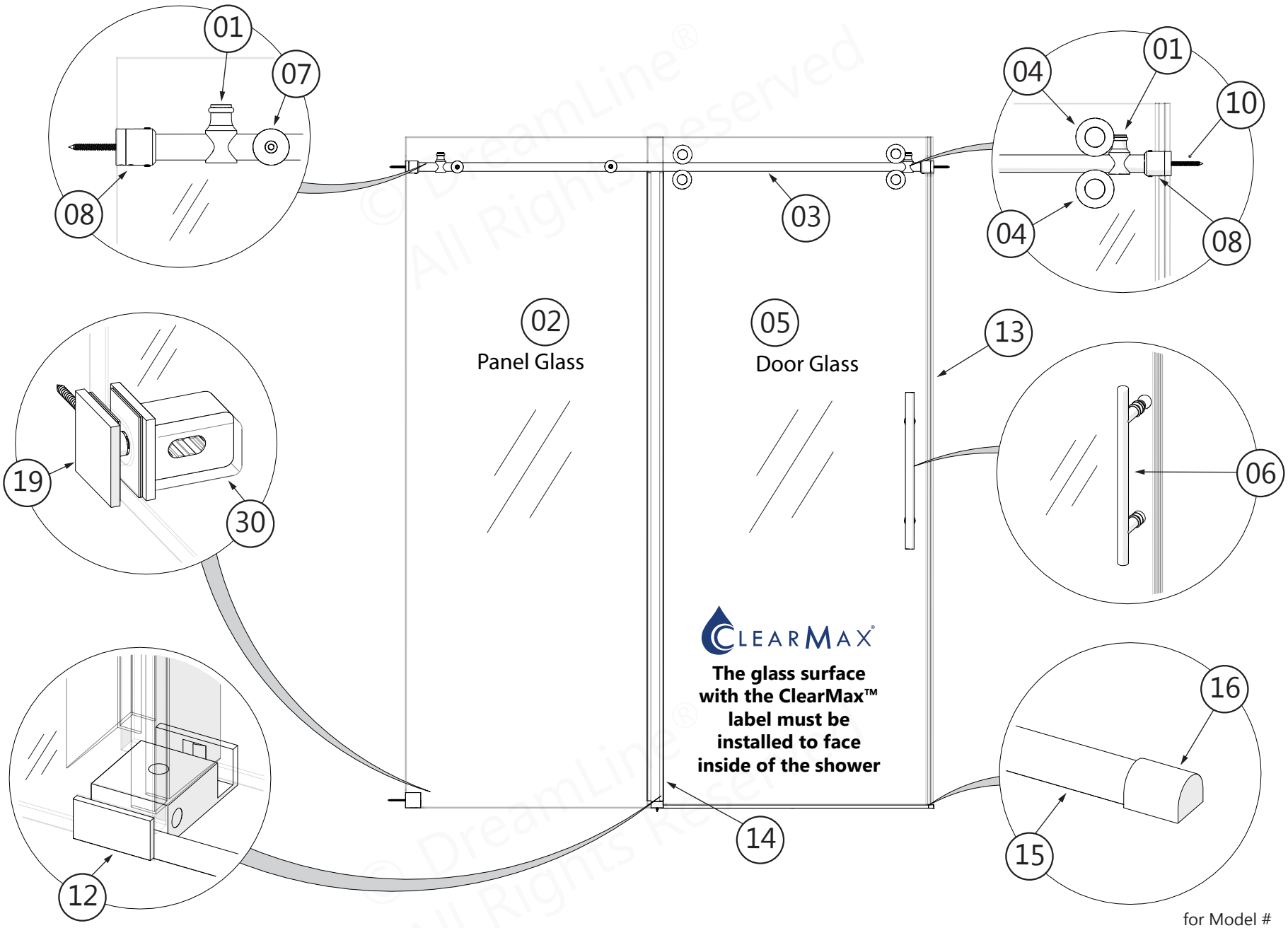

for Model #
SHDR-61487620-##
SHDR-61547620-##
SHDR-61606220-##
SHDR-61607620-##

*Right-hand door installation shown.

© 2019 DreamLine® All Rights Reserved

Parts List A

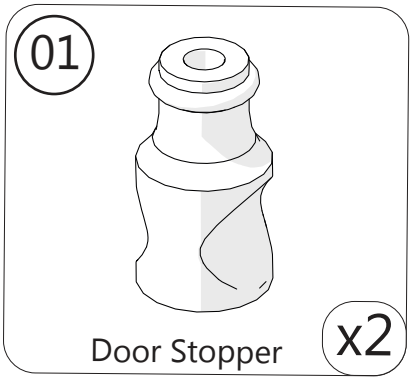

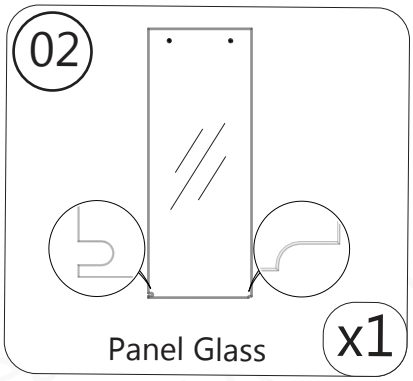

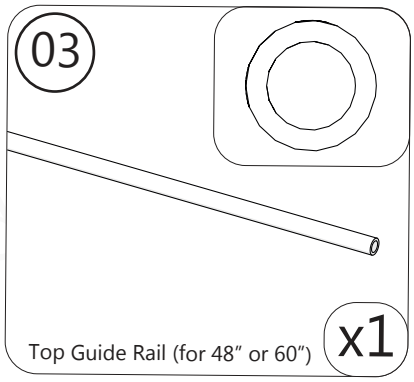

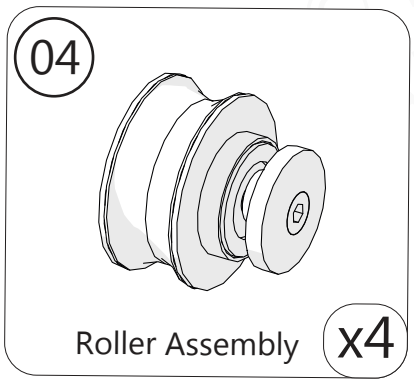

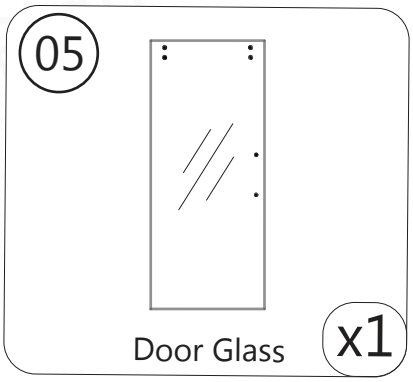

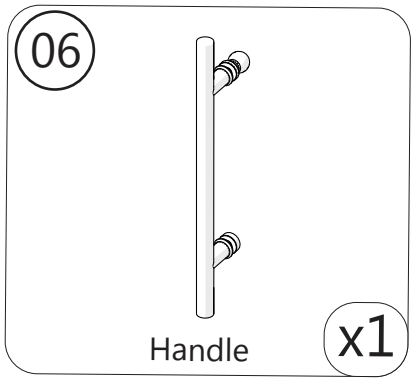

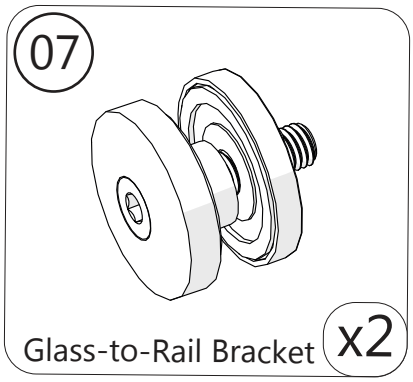

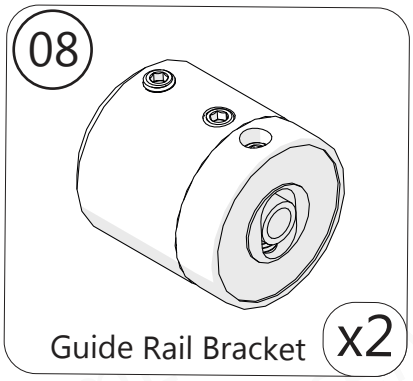

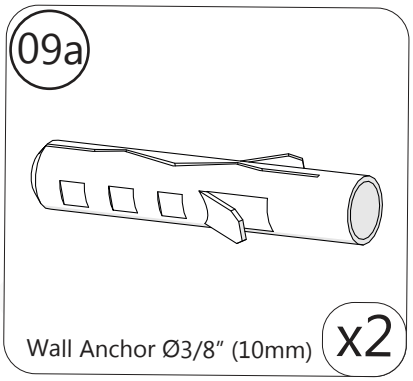

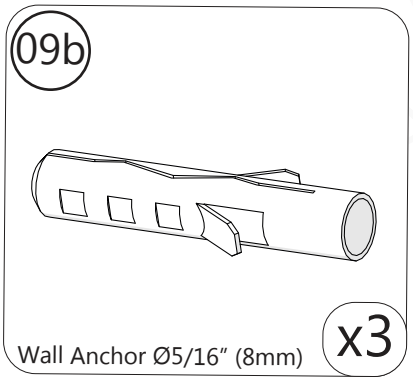

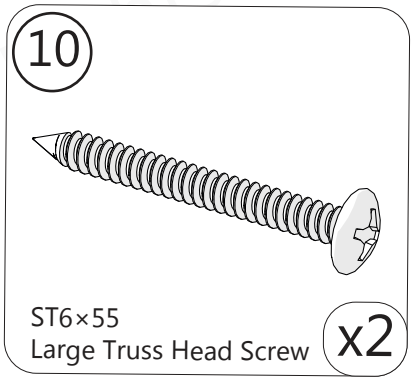

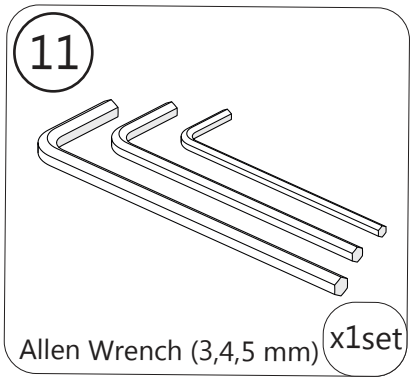

©2019 DreamLine® All Rights Reserved

Parts List

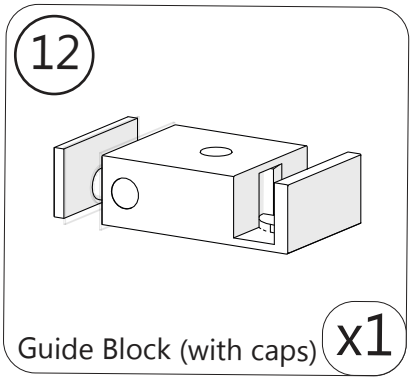

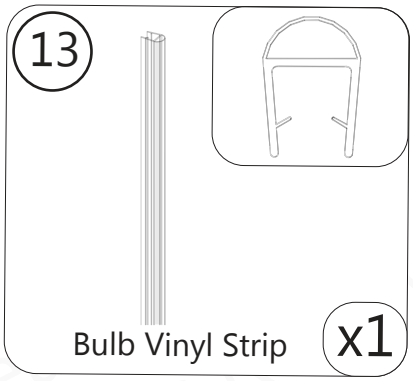

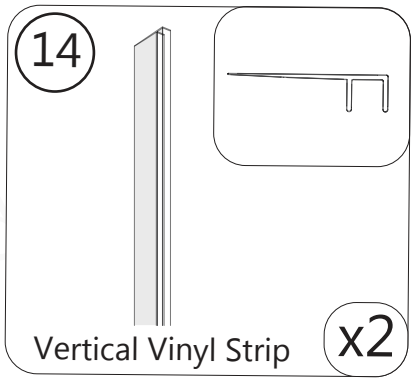

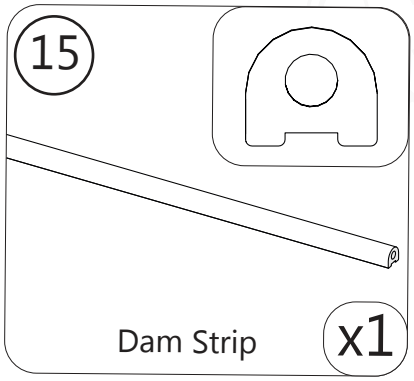

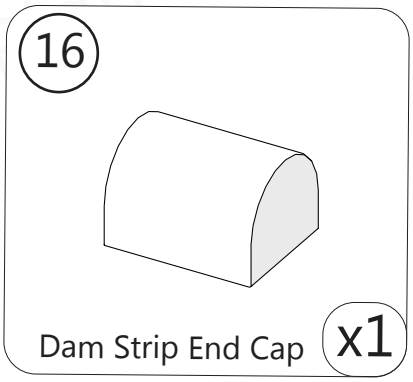

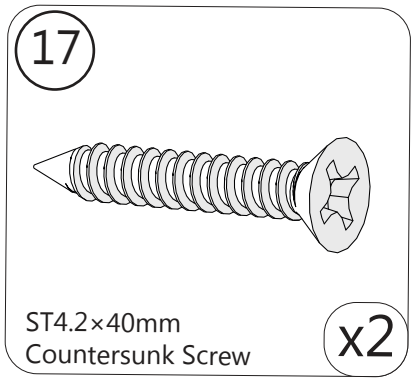

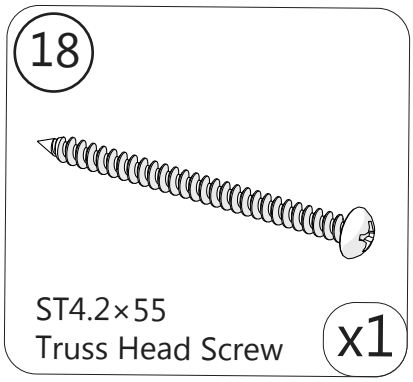

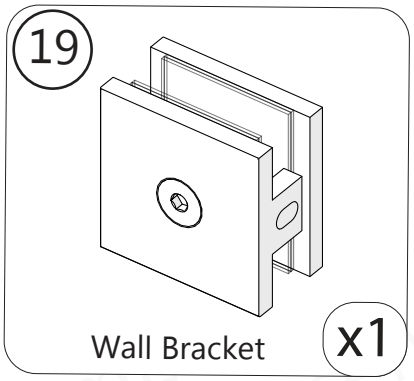

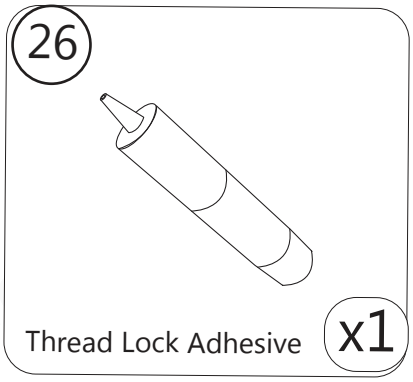

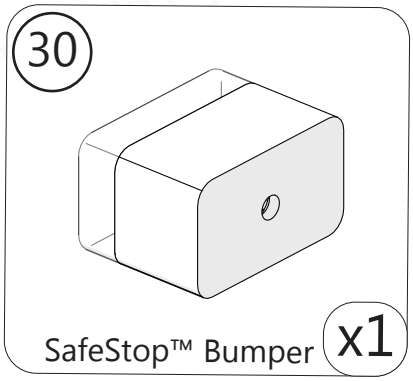

©2019 DreamLine® All Rights Reserved

Detailed Diagram 'B' of Shower Door Components

72" MODEL ONLY

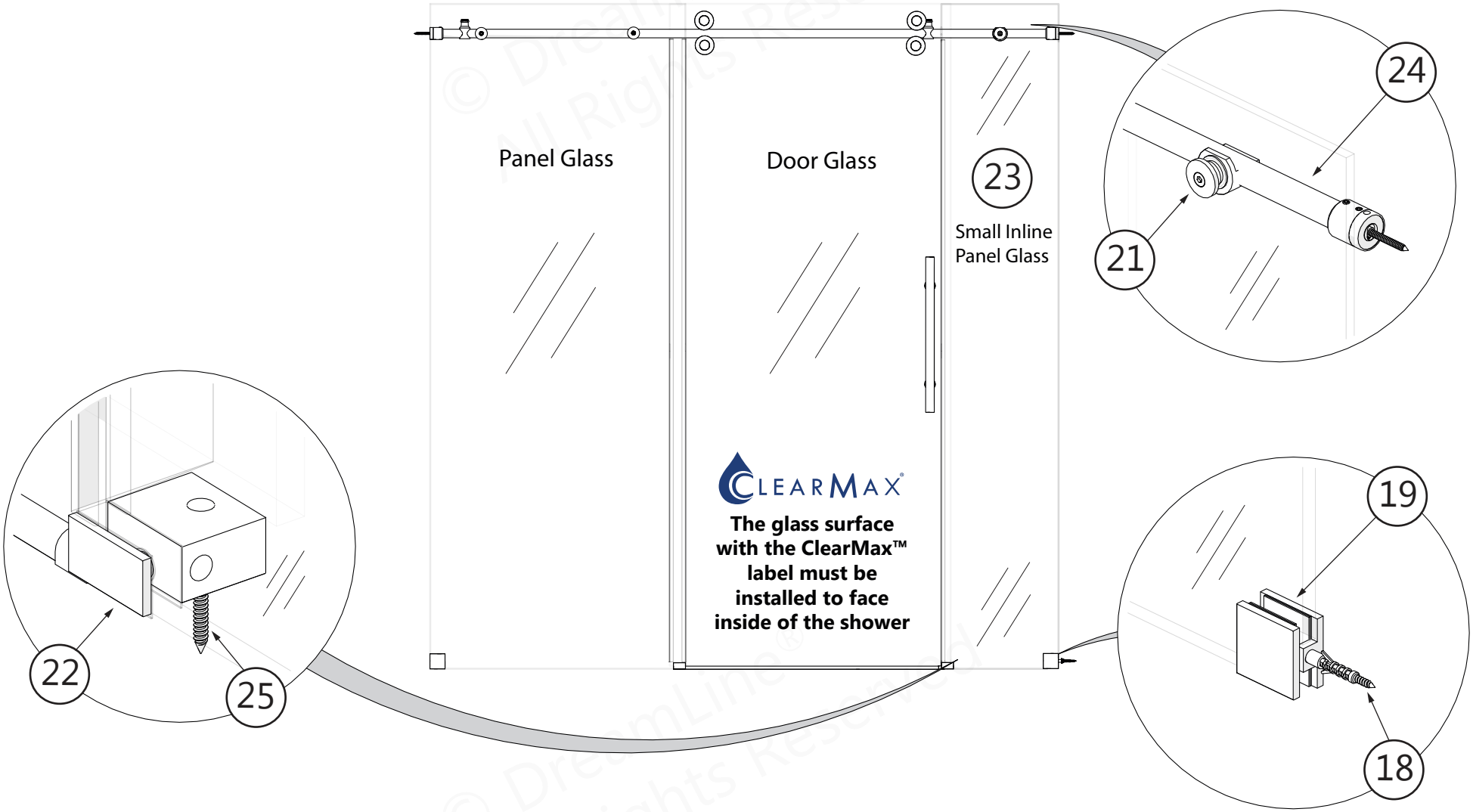

*Right-hand door installation shown.

for Model # (for 72")
SHDR-61727620-##

© DreamLine® All Rights Reserved

© 2019 DreamLine® All Rights Reserved

Parts List B

72" MODEL ONLY

09b

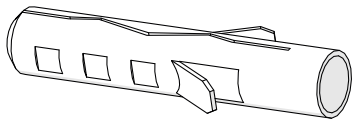

Wall Anchor Ø5/16" (8mm) x2

11

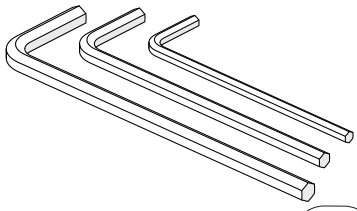

Allen Wrench (3,4,5mm) x1set

14

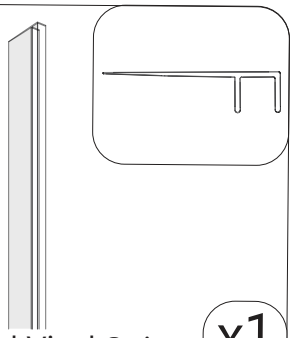

Vertical Vinyl Strip x1

18

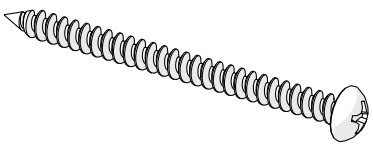

ST4.2×55
Truss Head Screw x1

19

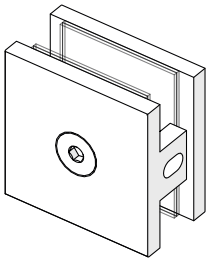

Wall Bracket x1

21

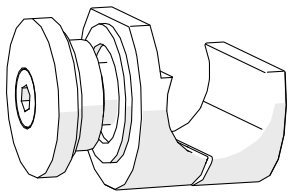

Glass-to-Rail Bracket x1

22

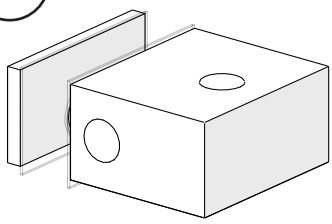

Small Inline Panel Glass
Bottom Bracket x1

23

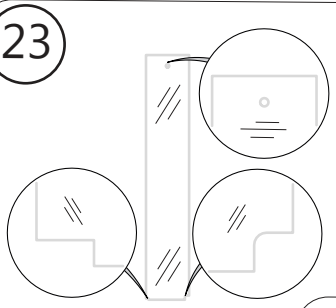

Small Inline Panel Glass x1

24

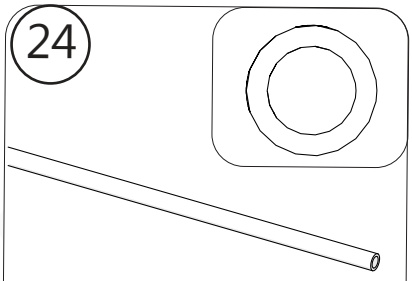

Top Guide Rail
(for 72") x1

25

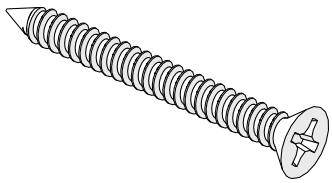

ST4.2×40
Countersunk Screw x1

©2019 DreamLine® All Rights Reserved

1

Installation Steps

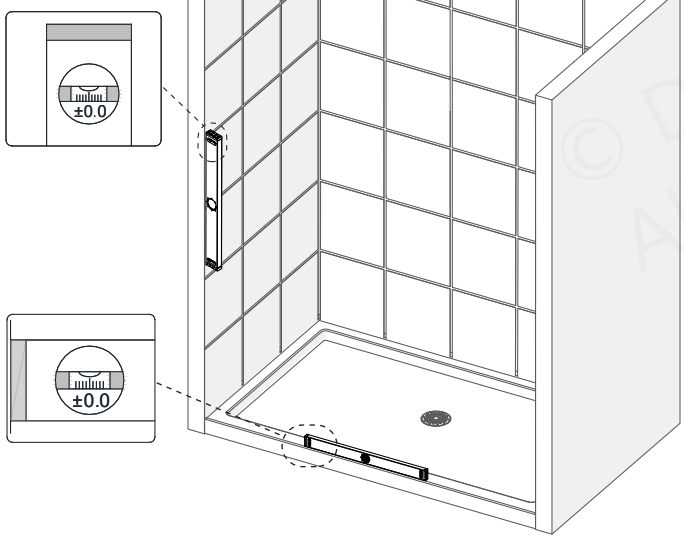

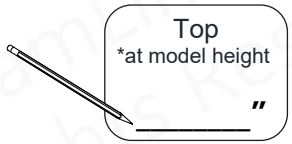

Top
*at model height
_____"

Middle
_____"

Bottom
_____"

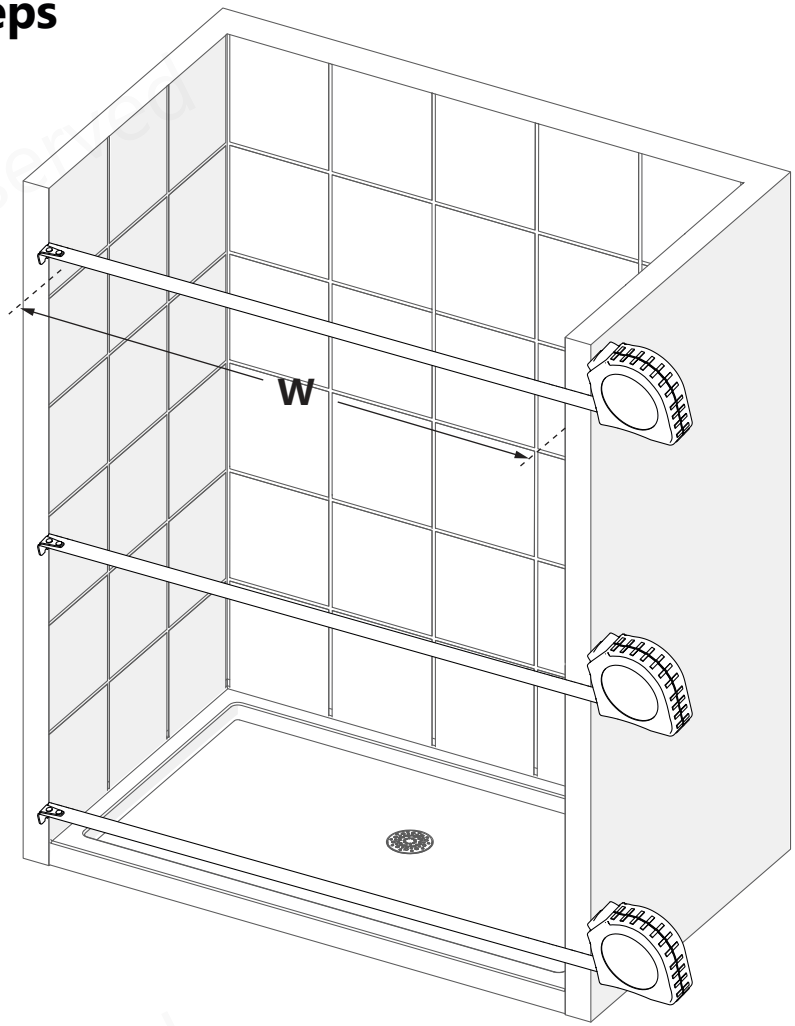

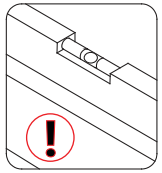

Threshold must be level

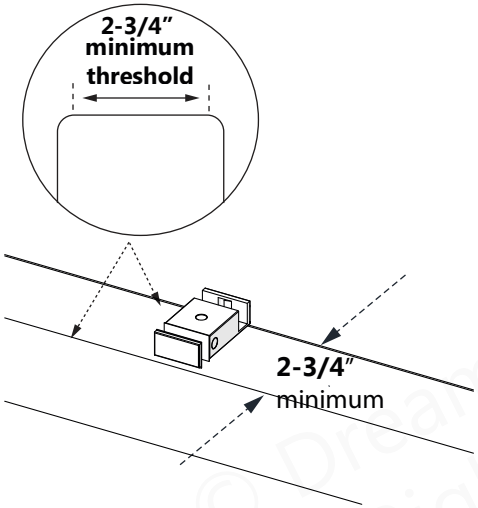

NOTE

The minimum threshold requirement for the ENIGMA-XO is **2-3/4" of flat threshold space**.

Tools Needed

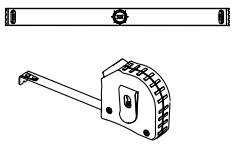

© DreamLine® All Rights Reserved

© 2019 DreamLine® All Rights Reserved

2

The length to cut-off from the door side of the Top Guide Rail (#03) will be (L):

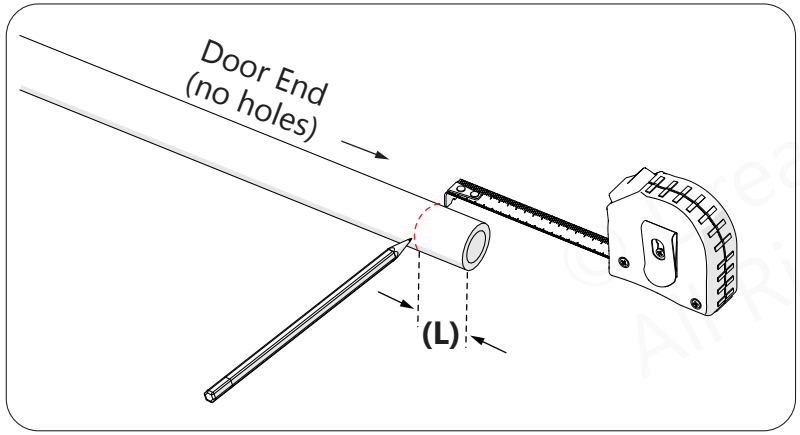

Model Width (-) Finished Opening (W) = Cut-off Length (L)

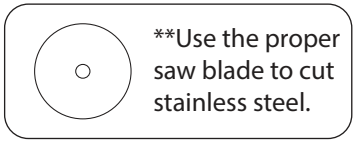

Fig 2

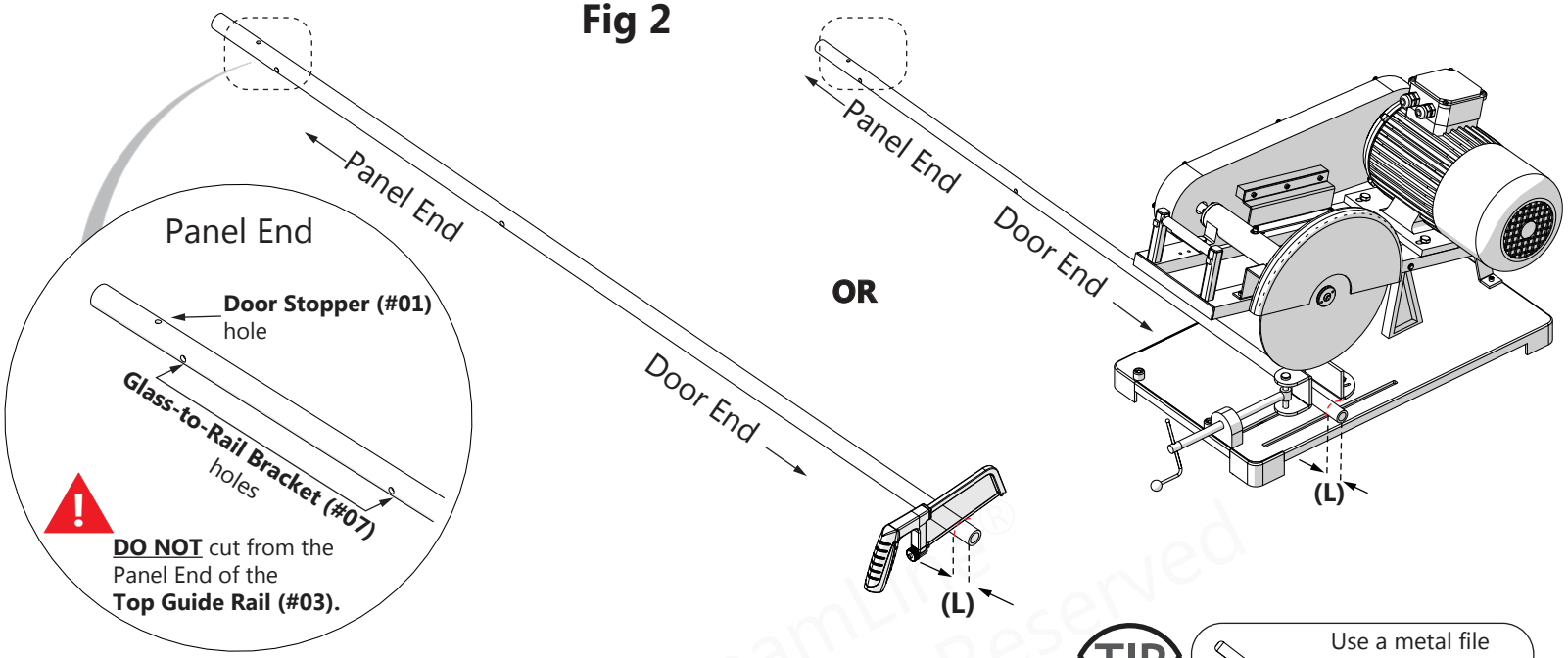

Parts Needed

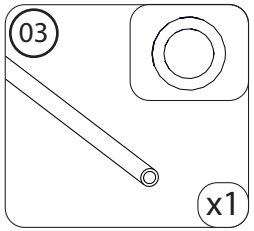

OR

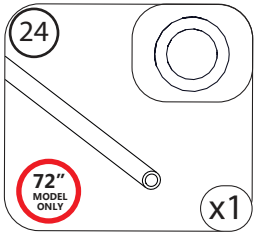

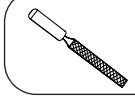

Use a metal file to deburr the cut end

Tools Needed

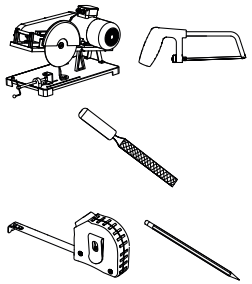

The Top Guide Rail (#03) has been pre-cut for the model width of: 48", 54", 60", 72".
(The actual rail is shorter than the model width by design to account for the guide rail brackets.)
Cut the **Top Guide Rail (#03)** from the door end **only**, which is the end that is farther from the **Glass-to-Rail Bracket (#07)** holes. **DO NOT** cut the panel end of the **Top Guide Rail (#03)**.

© 2019 DreamLine® All Rights Reserved

3

Fig 3

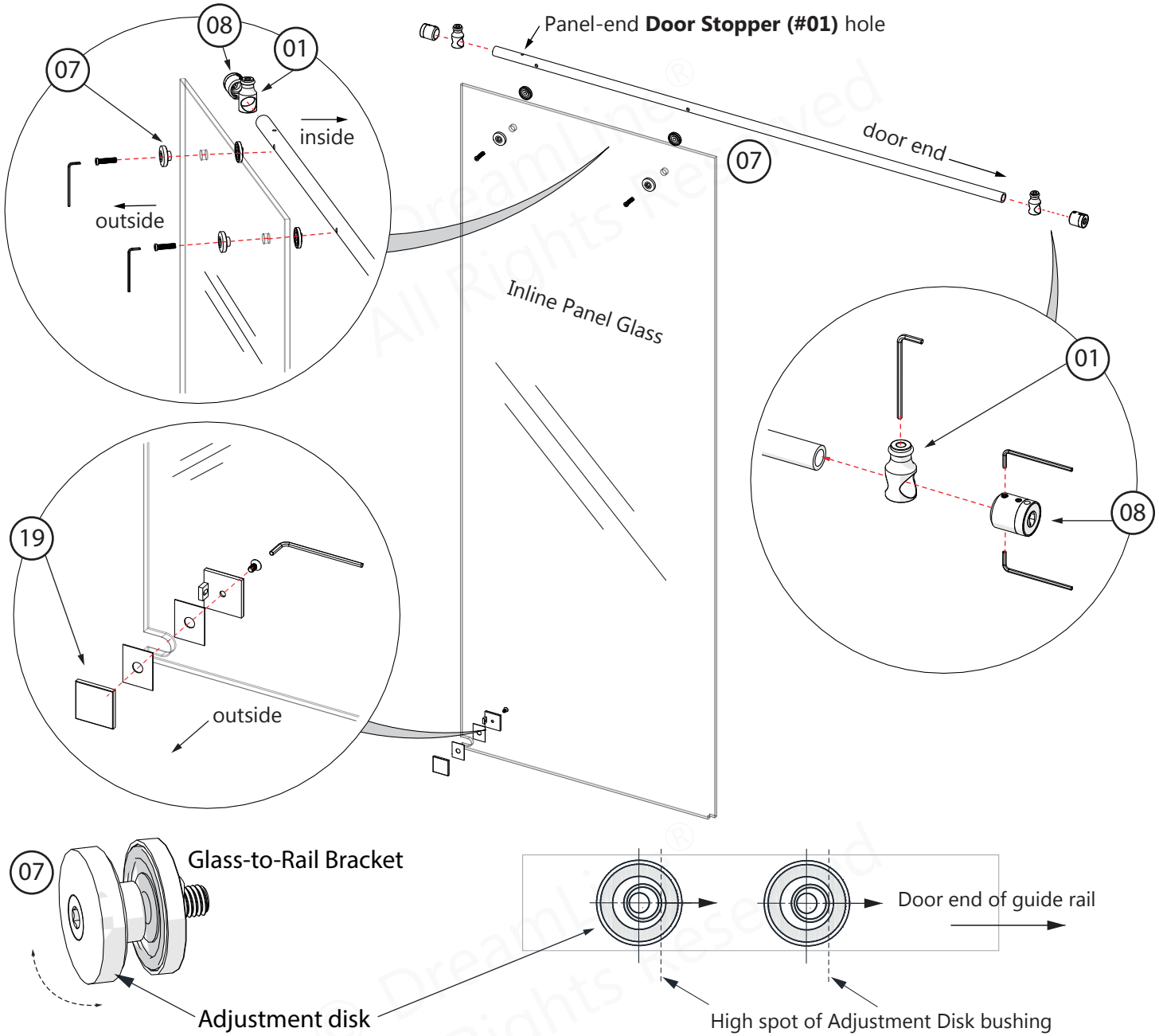

Parts Needed

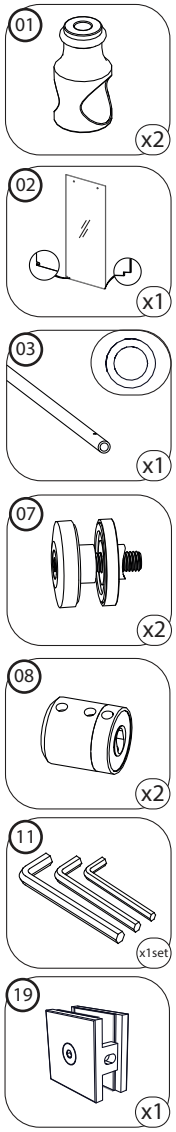

Tools Needed

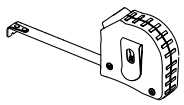

TIP Find and mark the location of the high spot on the outer surface of the adjustment disk with a felt tip pen to make adjustment easier to see.

NOTE The outer **Glass-to-Rail Bracket (#07)** disk has an eccentric bushing for adjustment. Be sure to install both Glass-to-Rail Bracket disks with the high spot of the bushing pointed towards the door end of the guide rail.

© 2019 DreamLine® All Rights Reserved

4

72”
MODEL ONLY

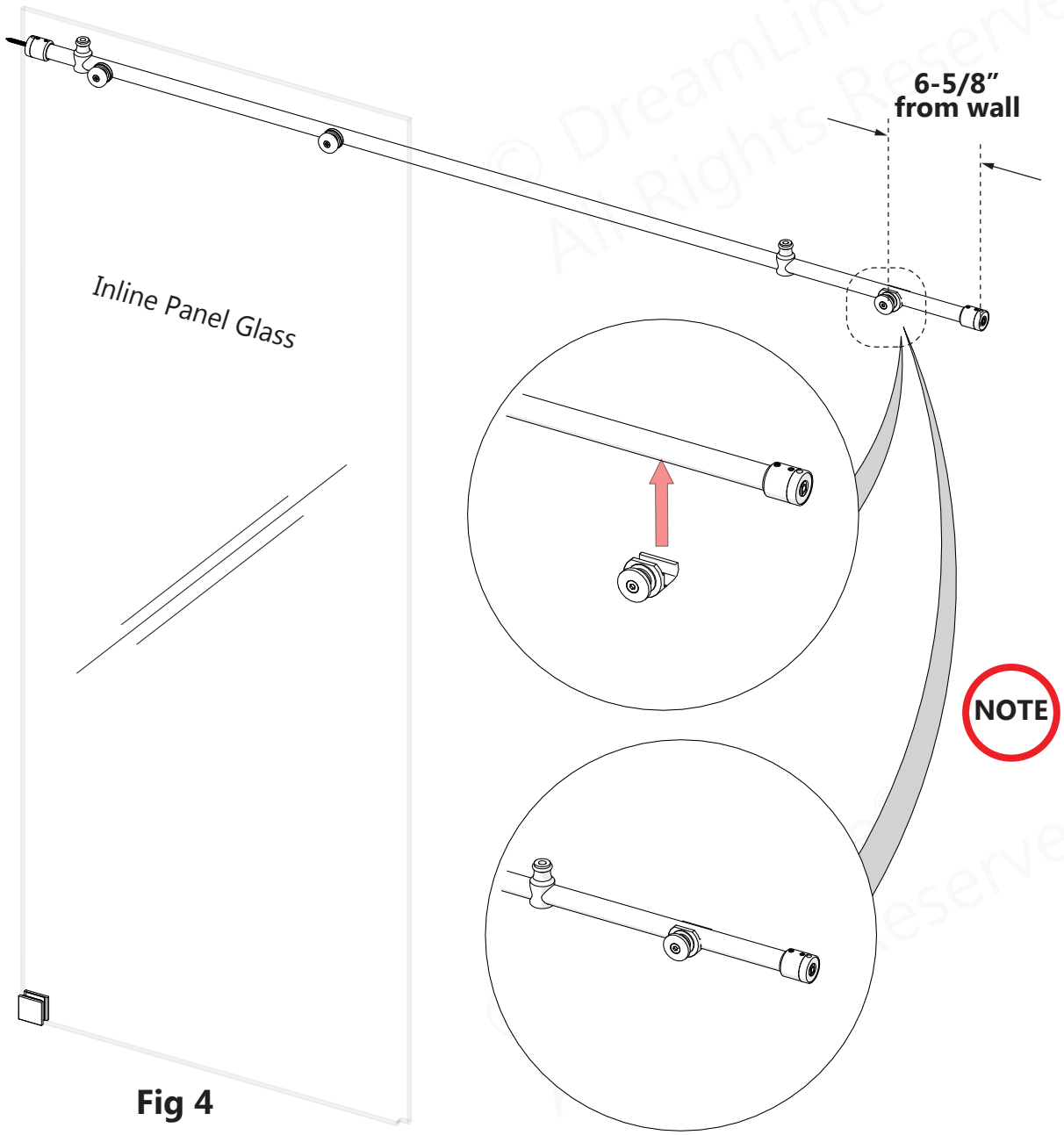

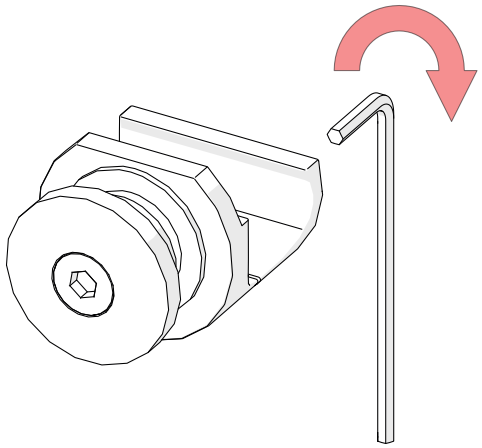

NOTE

Loosen the screw on the rear of the **Glass-to-Rail Bracket (#21)** with the supplied allen wrench and secure it to the **Top Guide Rail (#24)**. It is **NOT** neccessary to fully dissassemble the bracket during installation.

Fig 4

Parts Needed

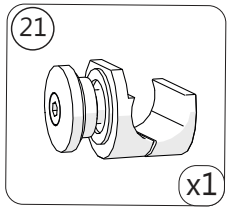

© 2019 DreamLine® All Rights Reserved

5

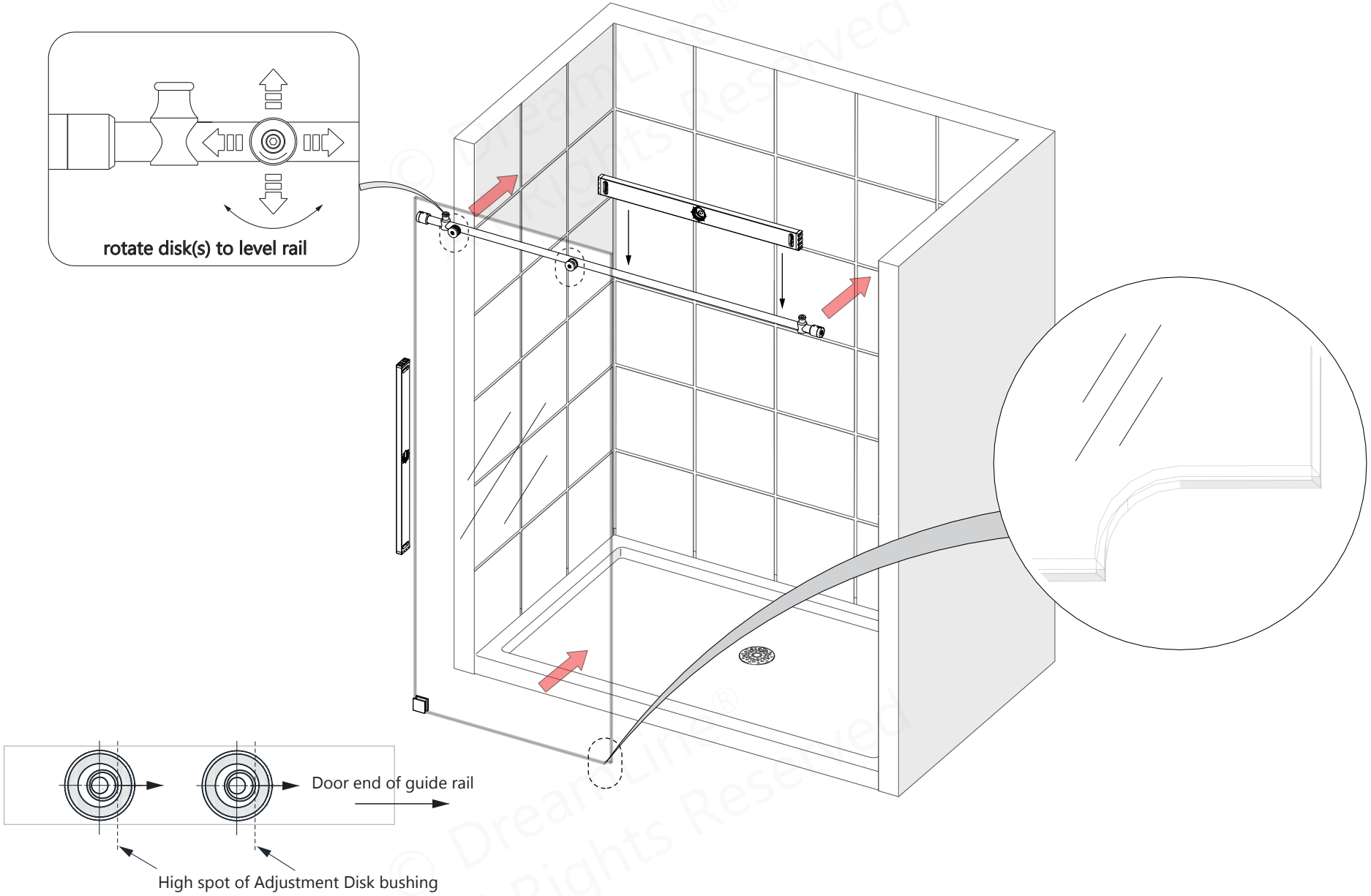

NOTE The **Panel Glass (#02) must be installed to the outside** of the **Top Guide Rail (#03)**.

Tools Needed

© 2019 DreamLine® All Rights Reserved

6

72”
MODEL ONLY

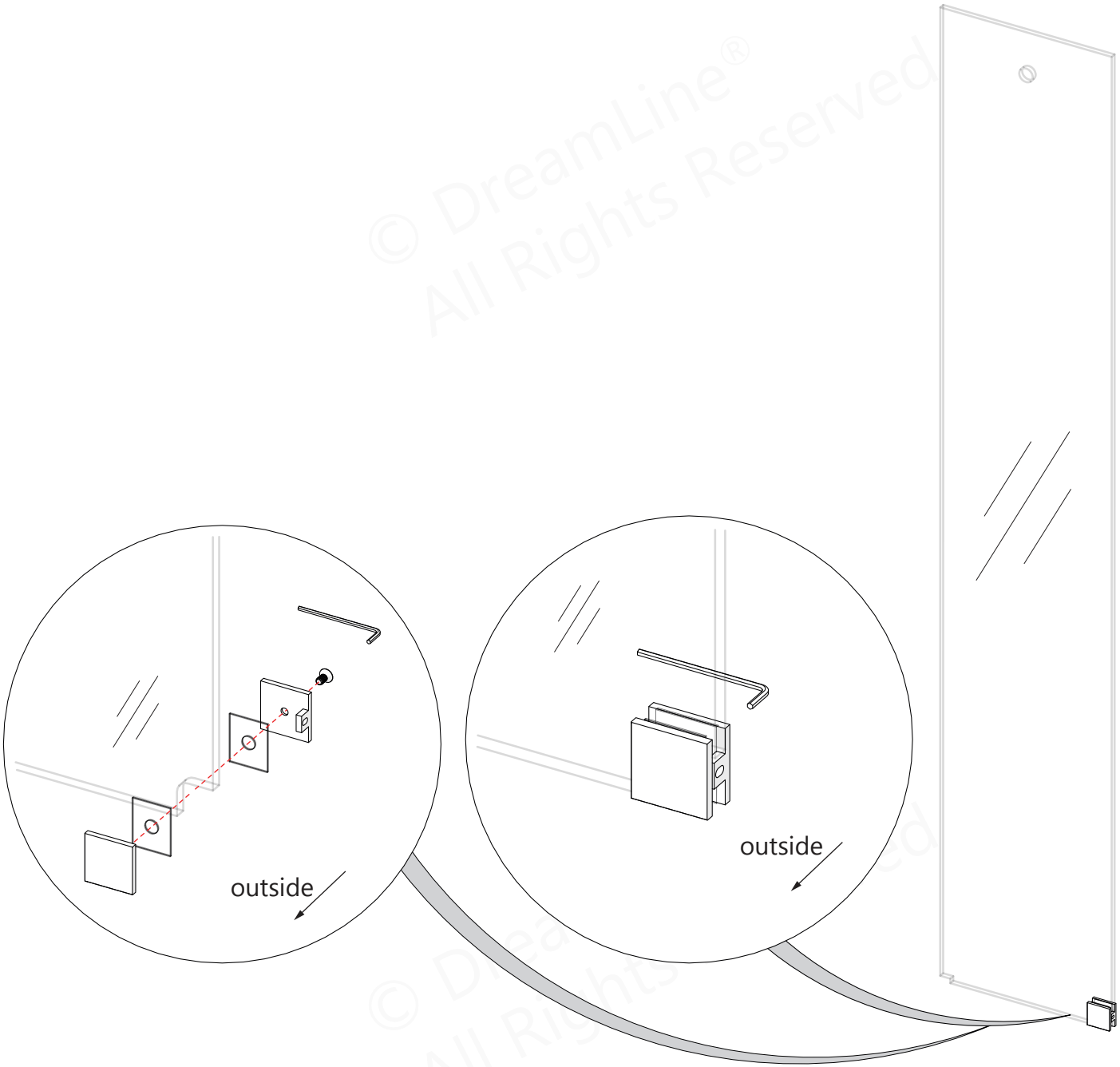

Parts Needed

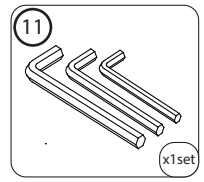

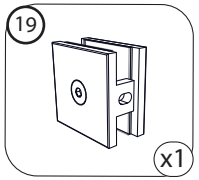

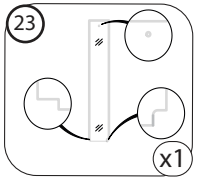

NOTE

For **single threshold installation (shown)**, this bracket will be installed into the wall.
For an **enclosure installation only**, this bracket will need to be installed into the threshold.

© DreamLine® All Rights Reserved

© 2019 DreamLine® All Rights Reserved

7

72" MODEL ONLY

1

2

3

Fig 7a

Fig 7b

Parts Needed

11 x1set

21 x1

23 x1

Tools Needed

© 2019 DreamLine® All Rights Reserved

8

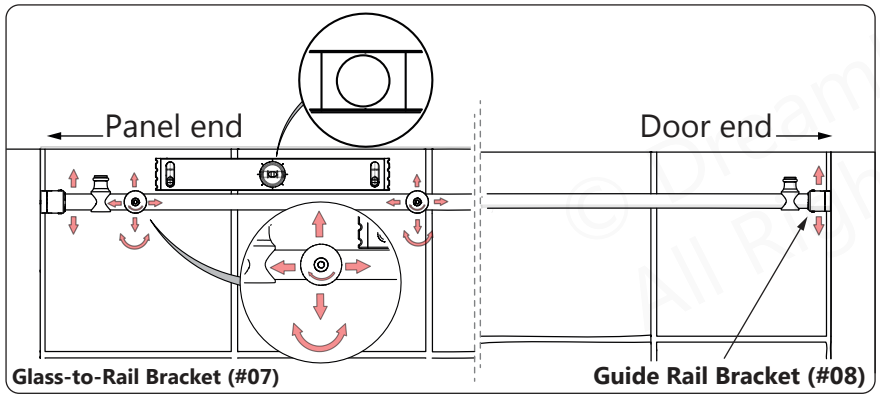

Fig 8a *Right-hand door installation shown.

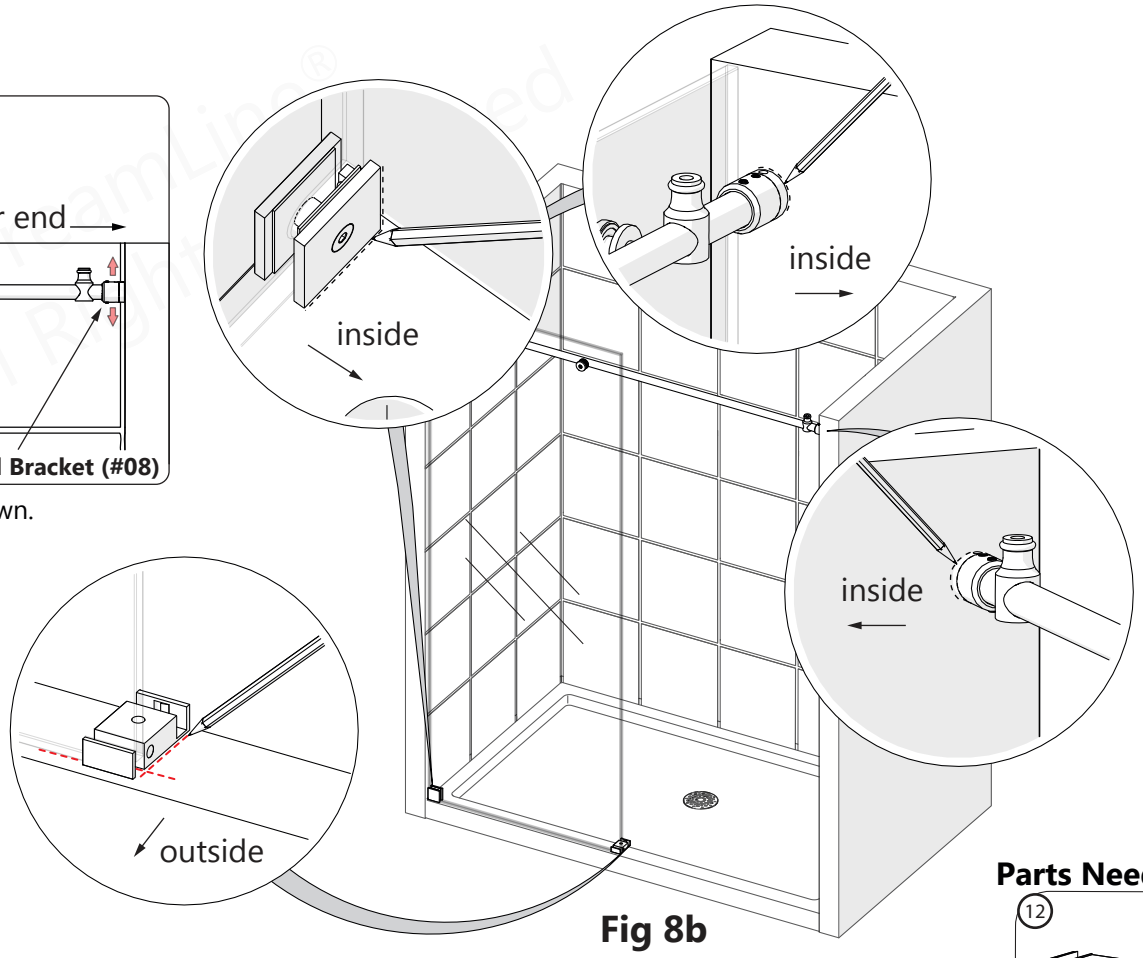

Fig 8b

9

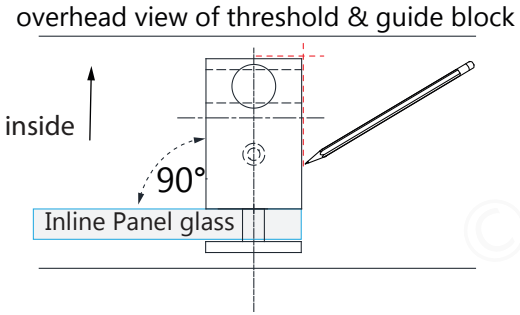

Guide Block (#12) must be installed square to the plane of the glass.

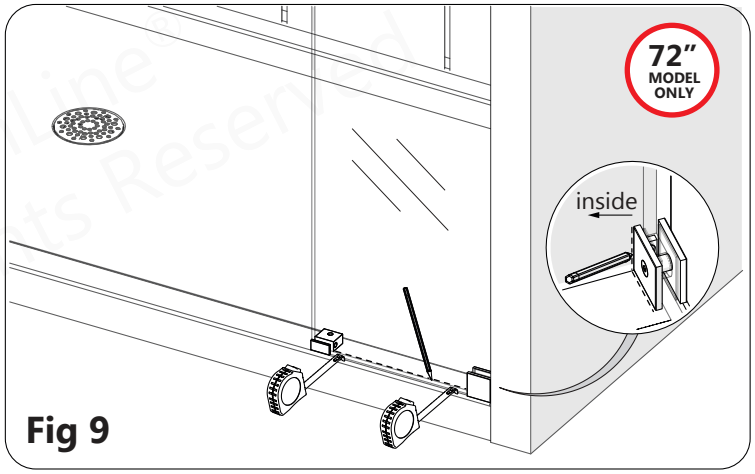

Fig 9

Parts Needed

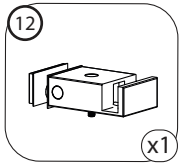

*72" Model Only

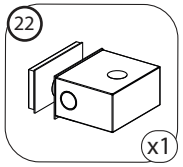

Tools Needed

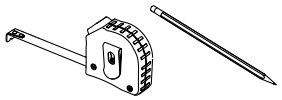

© 2019 DreamLine® All Rights Reserved

10

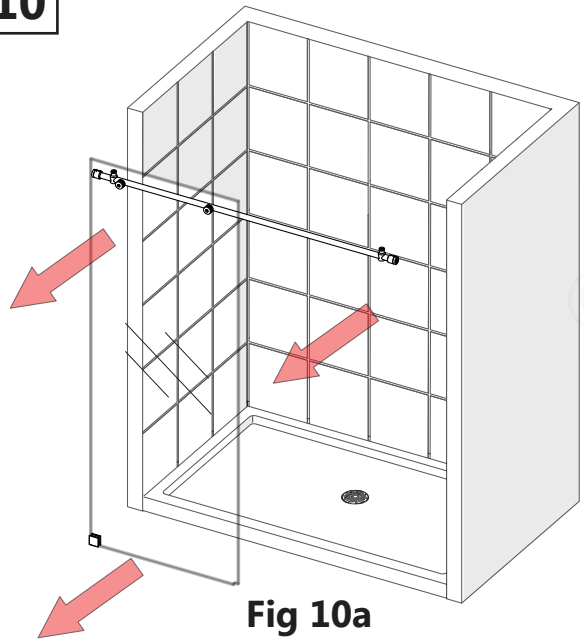

Fig 10a

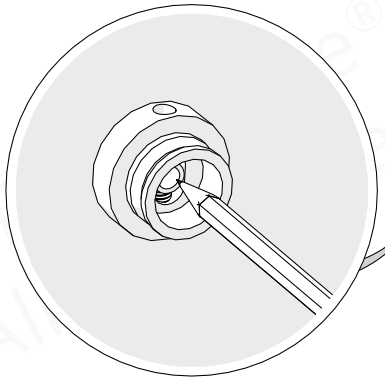

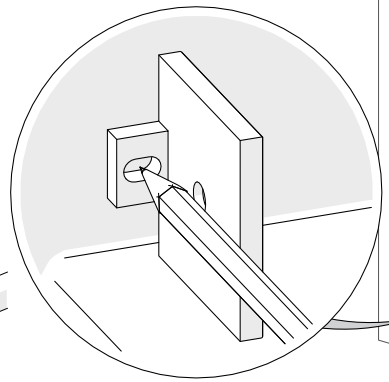

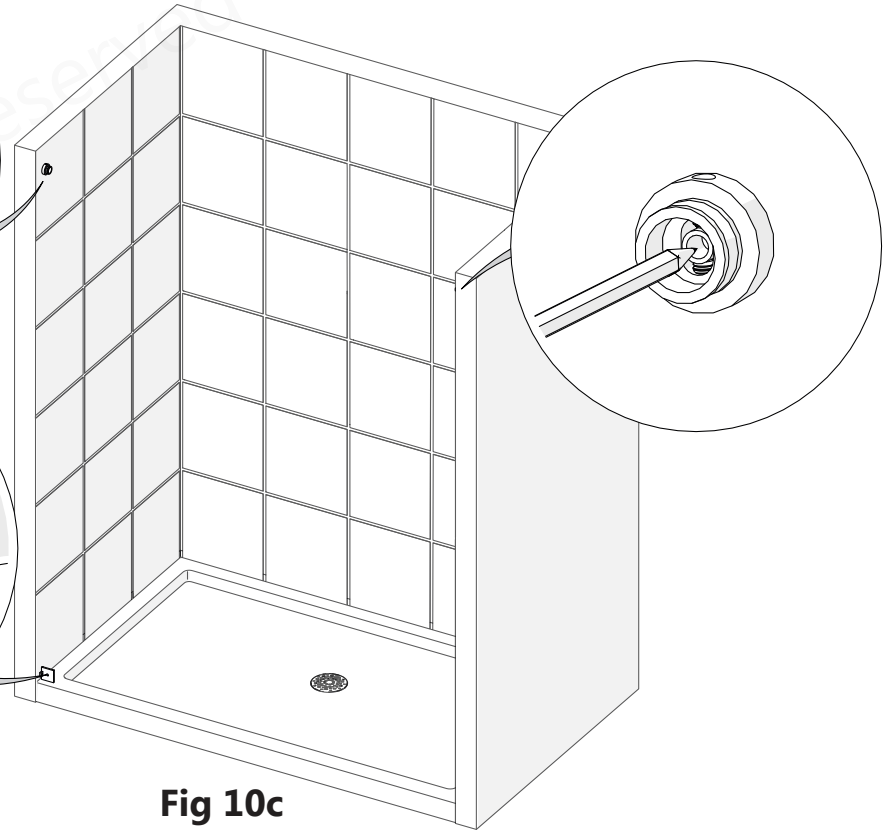

Fig 10c

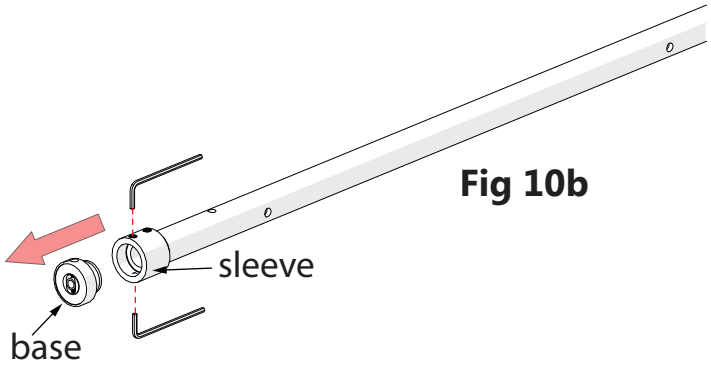

Fig 10b

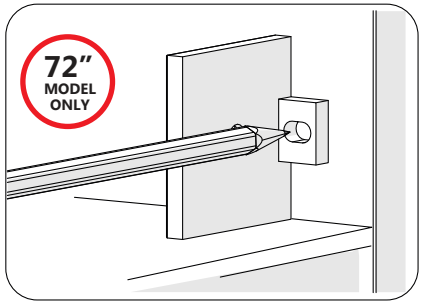

NOTE

Separate the **Guide Rail Bracket (#08)** base from the sleeve by loosening the set screws. Leave the sleeves on both ends of the Top Guide Rail. **<u>For enclosure installation only:</u>** remove the Guide Rail Bracket (#08) base on the side that will meet the Return Panel and refer to the **Enigma-X/Enigma-XO Enclosure Return Panel Manual.**

****<u>Step #11</u>** has an option for installing the guide rail brackets to the wall using anchors. However, **the manufacturer strongly recommends installing the guide rail brackets into studs or to pre-installed 2"x 6" wood reinforcements behind the wall in the area where the guide rail brackets will be attached to the wall.**

Tools Needed

© 2019 DreamLine® All Rights Reserved

11

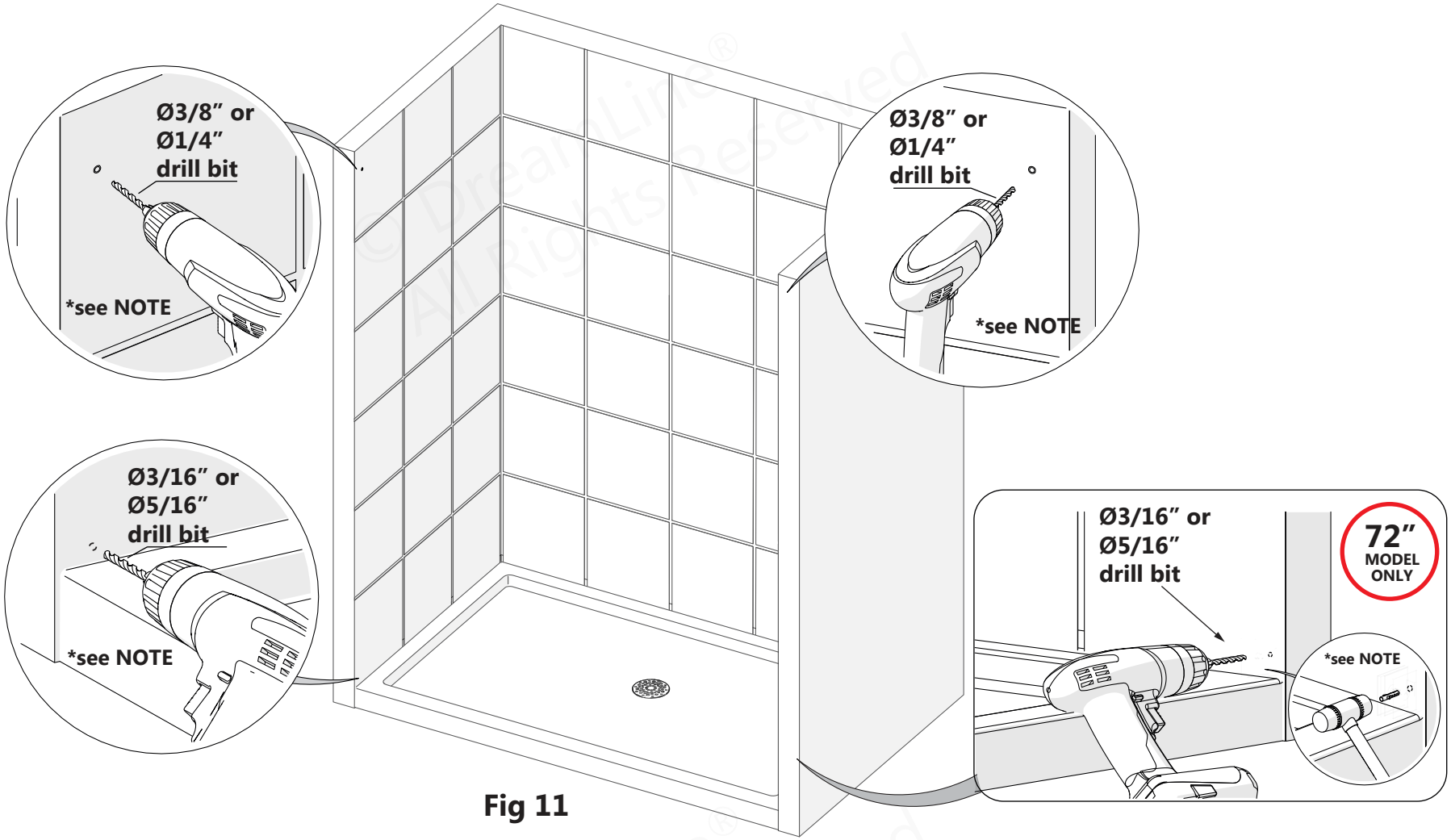

Fig 11

NOTE

For Guide Rail Brackets:
- **If a stud is present behind the wall**:
  drill a **Ø1/4"(6mm)** hole up to the stud. **(recommended)**

OR
- **If no stud is present behind the wall**:
  drill a **Ø3/8"(7mm)** hole and install the **Wall Anchor (#09a).**

For Wall Brackets:
- **If a stud is present behind the wall**:
  drill a **Ø3/16"(4mm)** hole up to the stud.

OR
- **If no stud is present behind the wall**:
  drill a **Ø5/16"(10mm)** hole and install the **Wall Anchor (#09b).**

Parts Needed

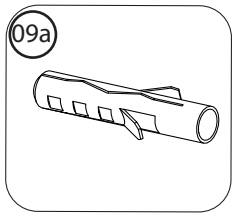

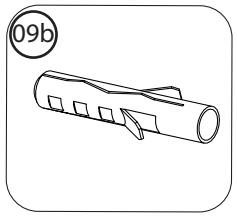

Tools Needed

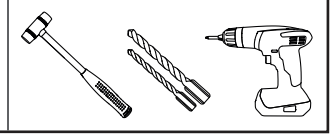

© 2019 DreamLine® All Rights Reserved

12

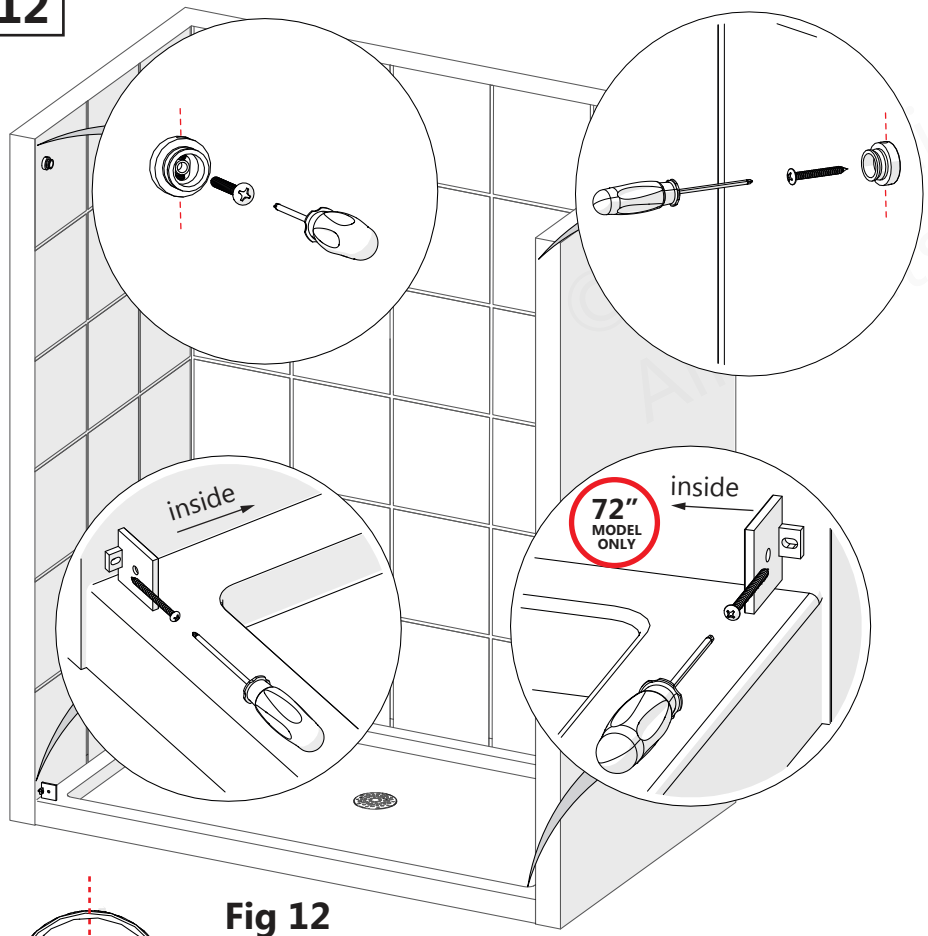

Fig 12

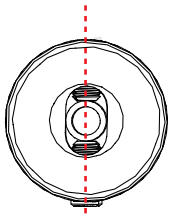

NOTE **The adjustment set screws within the Guide Rail Bracket (#08) must be aligned vertically for easier access to adjust for level if necessary after the glass is installed. Align the set screws vertically and tighten.**

! **DO NOT** attach the handle to the Door Glass until instructed. **DO NOT** attempt to lift the Door Glass with the handle as this may result in damage to the glass and/or serious personal injury. Use a professional grade glass suction cup and an assistant.

NOTE Leave the corner protectors on the glass until it is necessary to remove them

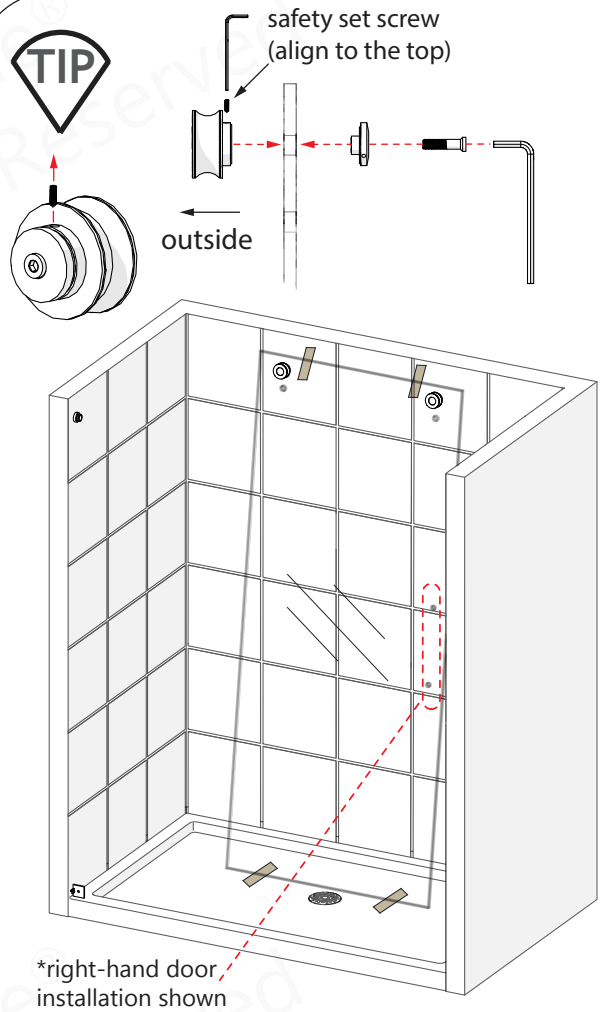

Before you install the **Panel Glass (#02)**, attach the top **Roller Assemblies (#04)** to the **Door Glass (#05)** with the wheels facing outside of the shower. Align the **safety set screw** towards the top for easier access. Then, take the **Door Glass (#05)** into the shower area and lean it against the wall with the handle holes on the correct side. Always use padding to protect the glass and shower surfaces.

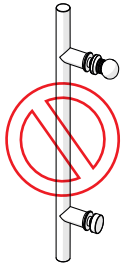

Parts Needed

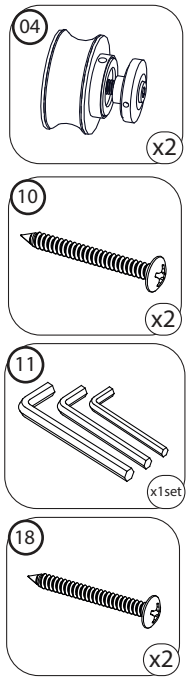

Tools Needed

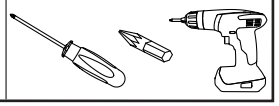

© 2019 DreamLine® All Rights Reserved

13a

Guide Block Installation

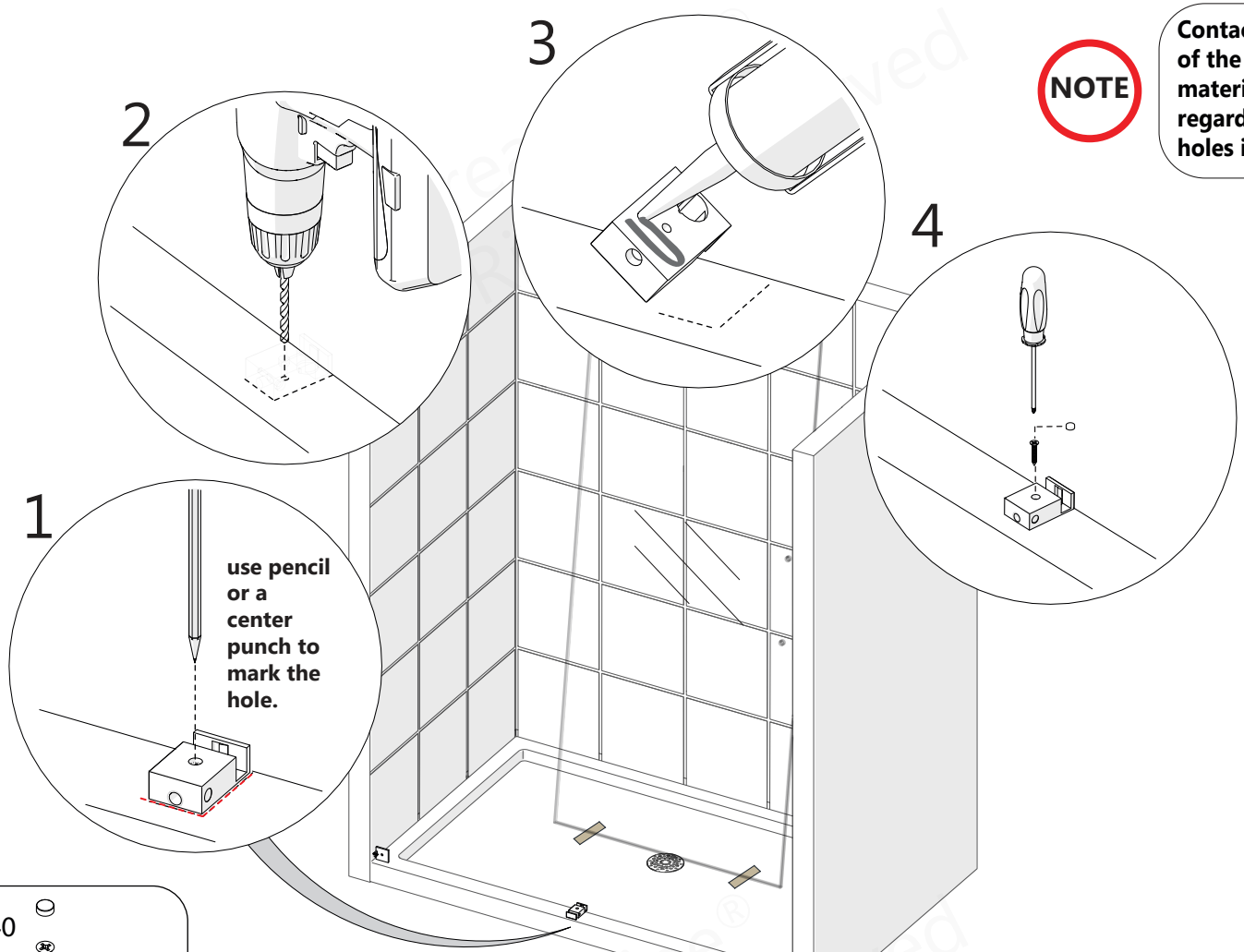

Fig 13a

NOTE

Contact the manufacturer of the base, tub or threshold material with any questions regarding the drilling of holes into their product.

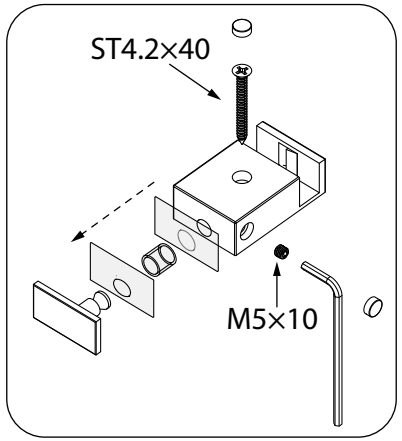

Part #12 - Guide Block (with caps)

NOTE

- <u>For installation into an **Acrylic Threshold**</u>: drill a **Ø1/8"(3mm)** hole and use the **ST4.2 x 40mm Countersunk Screw (#17).**

OR

- <u>For installation into a **Tile Threshold**</u>: drill a **Ø3/16"(4mm)** hole up to the stud and use the **ST4.2 x 40mm Countersunk Screw (#17).**

Parts Needed

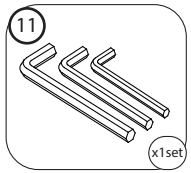

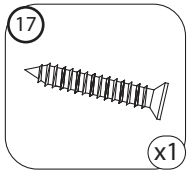

Tools Needed

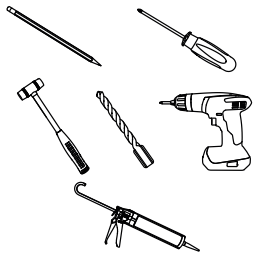

© 2019 DreamLine® All Rights Reserved

13b

Guide Block Installation

72" MODEL ONLY

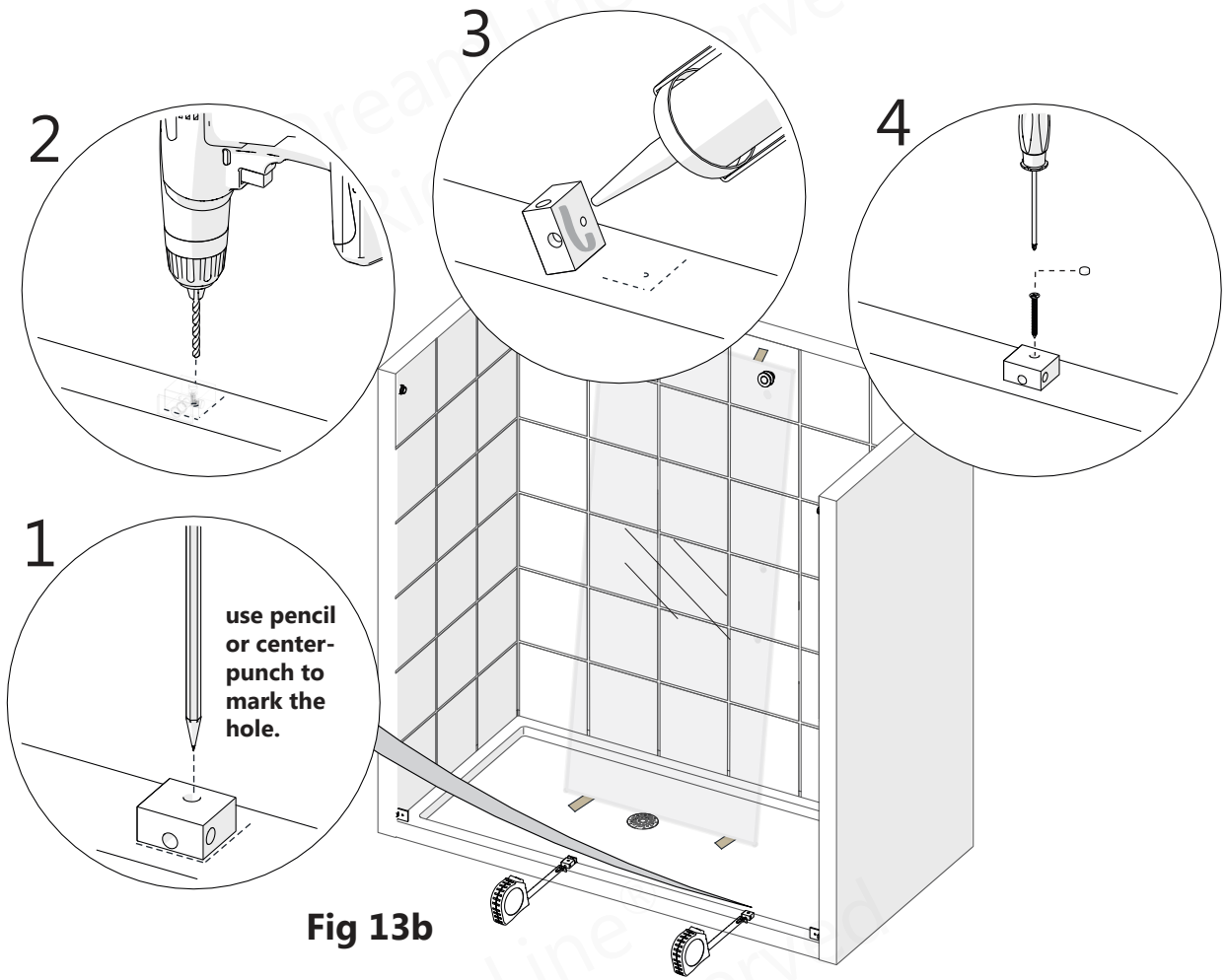

Fig 13b

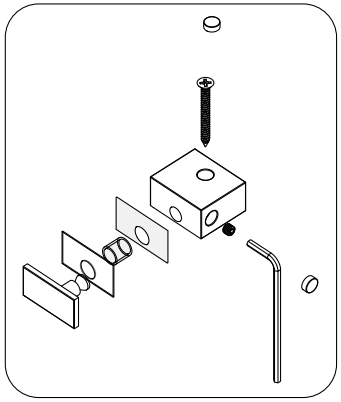

Part #22 - Small Inline Panel Glass Bottom Bracket

Guide Block on Threshold Overview

Parts Needed

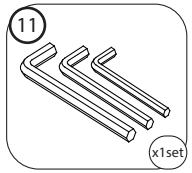

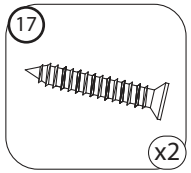

Tools Needed

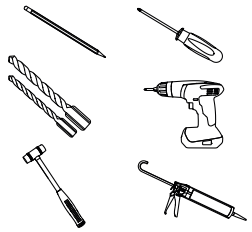

NOTE

- For installation into an **Acrylic Threshold**:
  drill a **Ø1/8"(3mm)** hole and use the **ST4.2 x 40mm Countersunk Screw (#17).**

OR

- For installation into a **Tile Threshold**:
  drill a **Ø3/16"(4mm)** hole up to the stud and use the **ST4.2 x 40mm Countersunk Screw (#17).**

NOTE

Contact the manufacturer of the base, tub or threshold material with any questions regarding the drilling of holes into their product.

© 2019 DreamLine® All Rights Reserved

14

Guide Rail Bracket Adjustment

TIP

Adjust the installed **Top Guide Rail (#03)** to level as necessary using the **Guide Rail Brackets (#08)** first and then the **Glass-to-Rail Brackets (#07)**. **Start adjustments from the door end.**

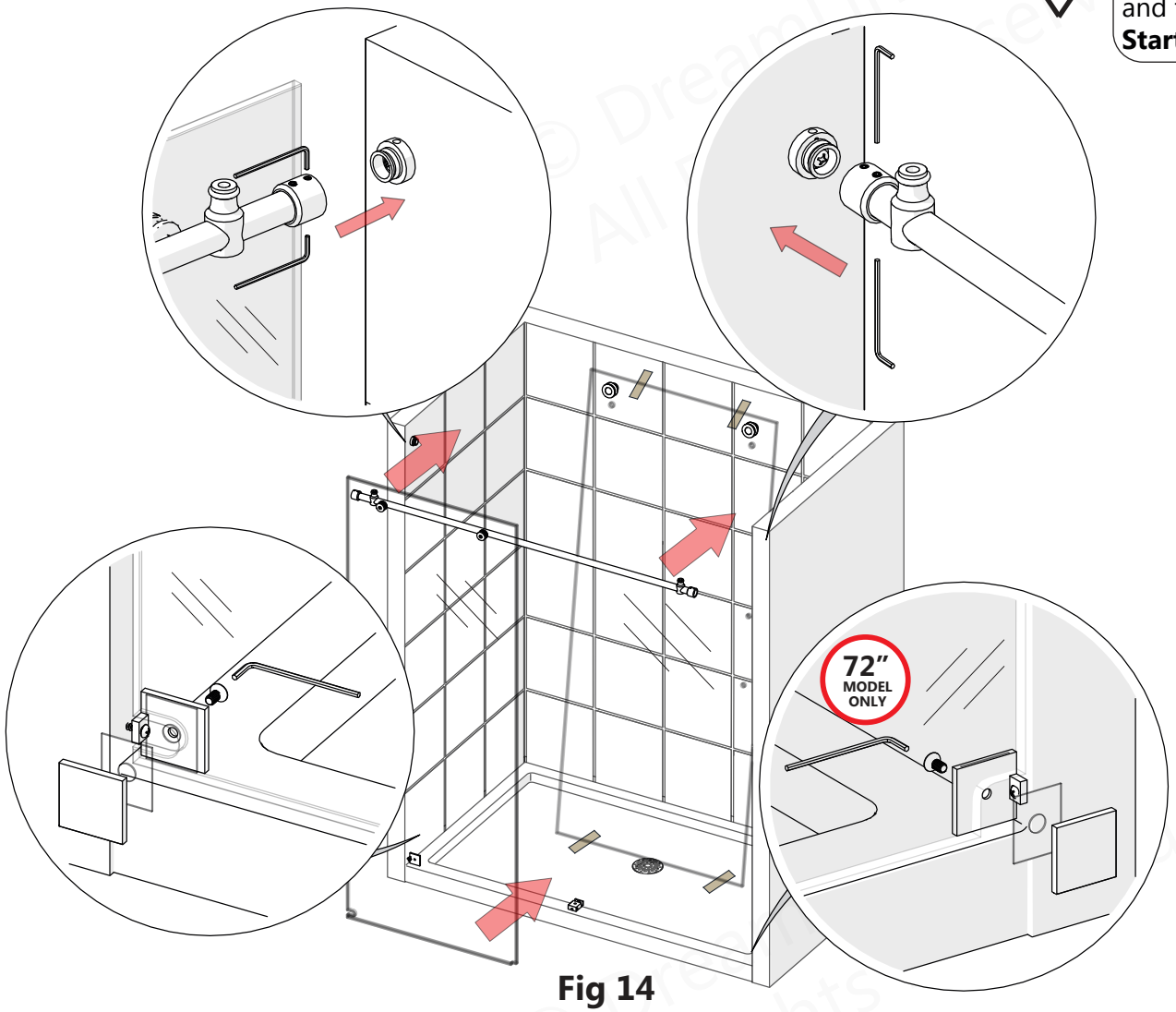

Fig 14

To lower the rail:
Loosen the top set screw and tighten the bottom set screw.

To raise the rail:
Loosen the bottom set screw and tighten the top set screw.

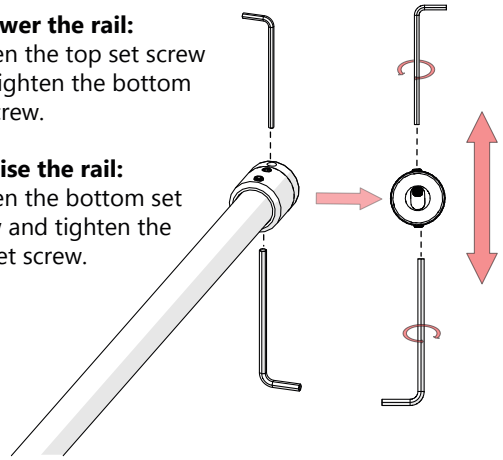

NOTE

Use the **Guide Rail Bracket (#08)** set screws to adjust the **Guide Rail (#03)** to level.

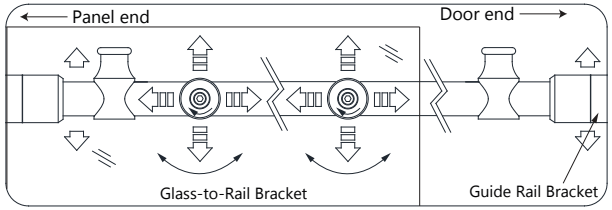

*Right-hand door installation shown

NOTE

For the 72" Model: Repeat this step for the **Wall Bracket (#19)** for the **Small Inline Panel Glass (#23) (Fig 14.4)**. Use the clear vinyl gasket between the glass and the metal parts to avoid contact with the glass, then tighten the bolt using the supplied **Allen Wrench (#11)**.
For Enclosure Model: Refer to **Step 8** in the **Enigma-X/Enigma-XO Enclosure Return Panel Manual** to connect the shower assembly to the Return Panel using the Glass-to-Guide Rail Connector (#28).

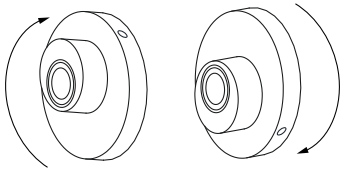

Glass-to-Rail Bracket Adjustments

Parts Needed

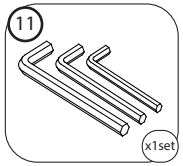

© 2019 DreamLine® All Rights Reserved

15

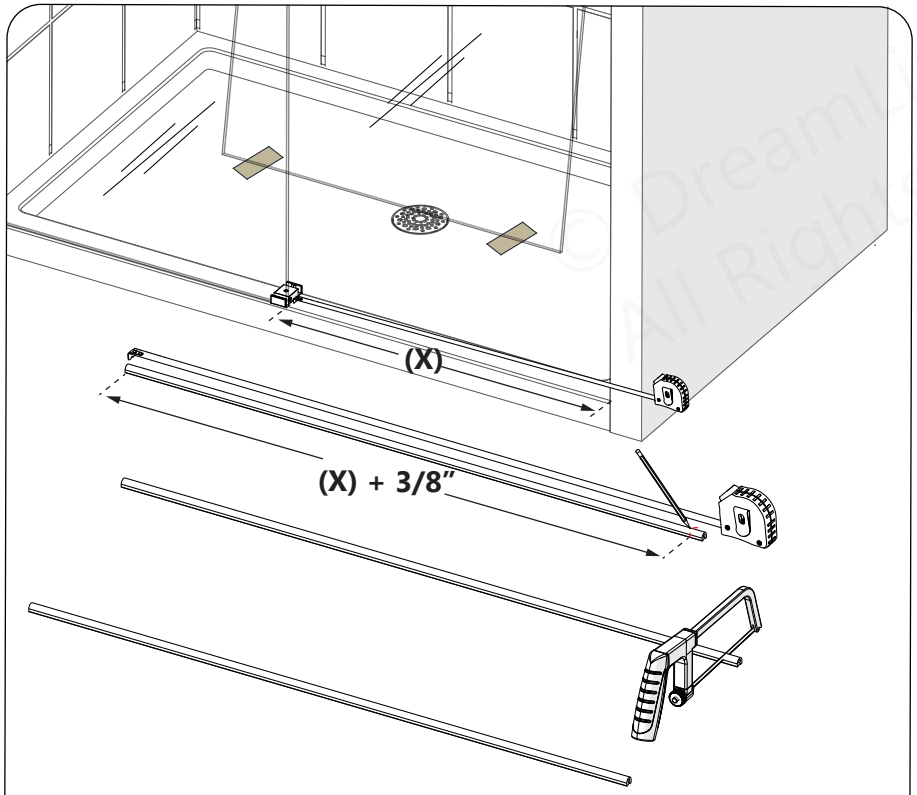

Measure the distance '**X**' from the **Guide Block (#12)** to the wall and add 3/8".

Fig 15a

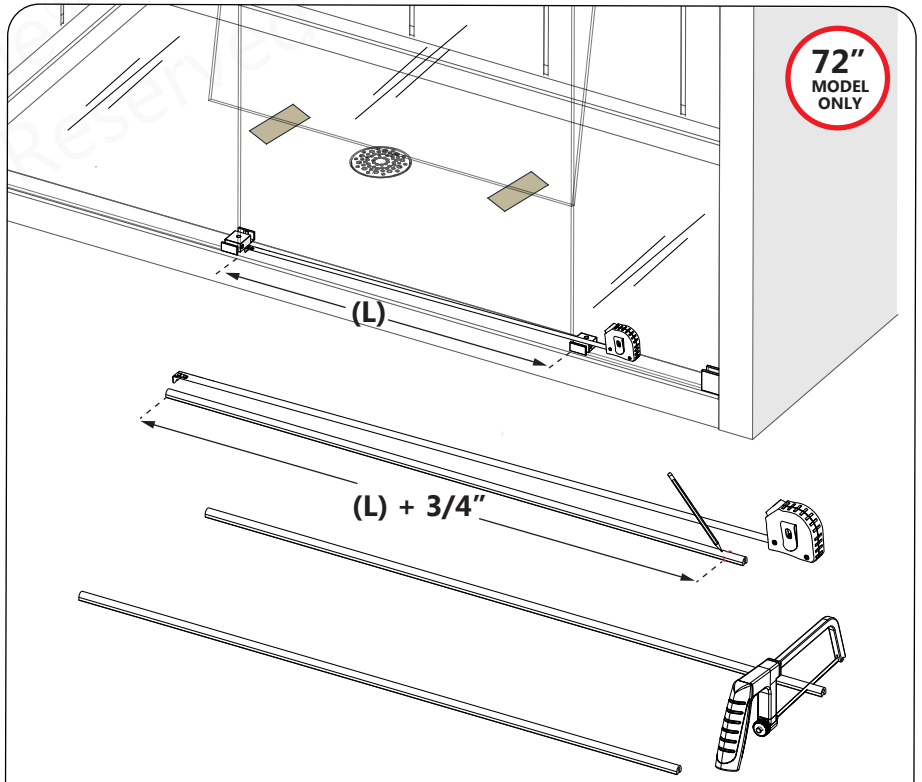

Measure the distance '**L**' between the guide blocks and add 3/4".

Fig 15b

Parts Needed

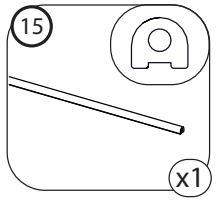

Tools Needed

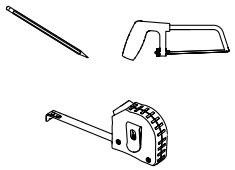

NOTE

48", 54" or 60" Model Size: Cut the **Dam Strip (#15)** to the size of: **(X) + 3/8".**

72" Model Size: Cut the **Dam Strip (#15)** to the size of: **(L) + 3/4".**

© DreamLine® All Rights Reserved

© 2019 DreamLine® All Rights Reserved

16

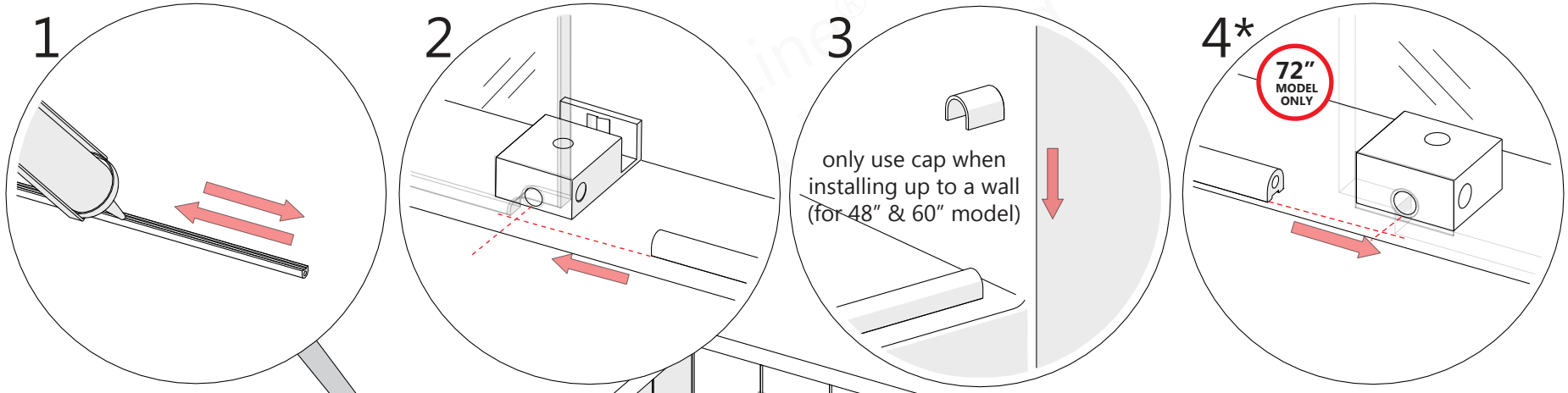

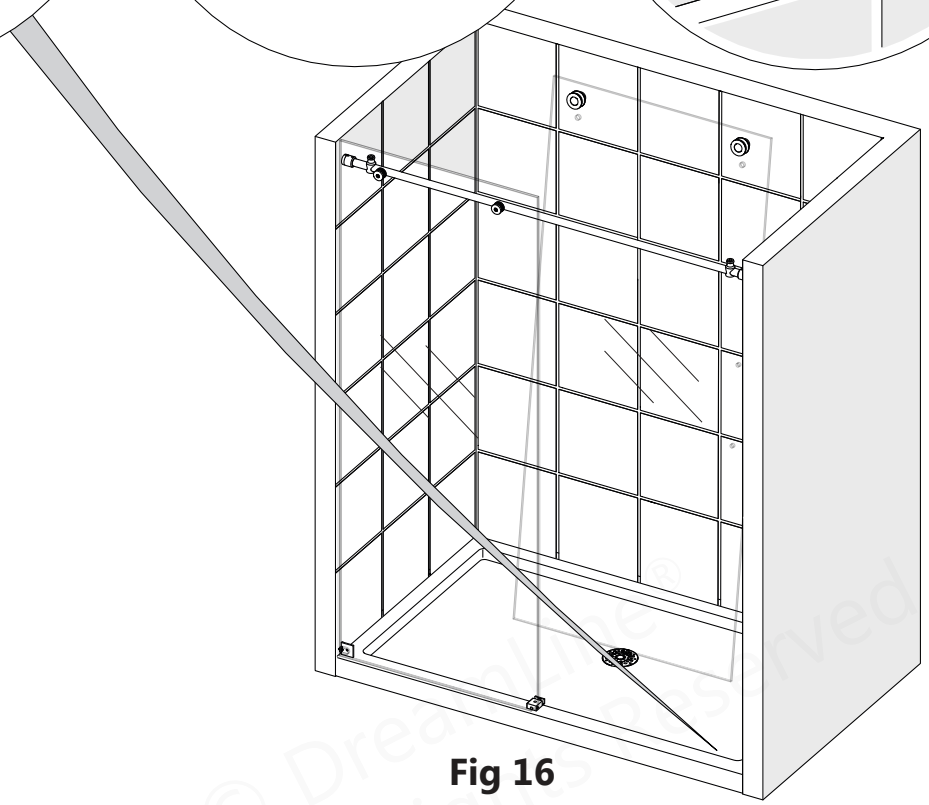

Fig 16

Parts Needed

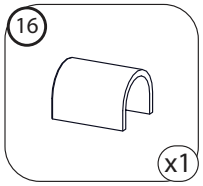

Tools Needed

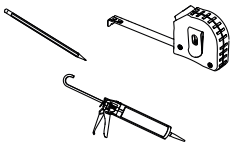

NOTE

<u>For the 72" Model:</u> Insert the **Dam Strip (#15) into** the **Small Inline Panel Glass Bottom Bracket (#22). (Fig 16.4*)**

© 2019 DreamLine® All Rights Reserved

17

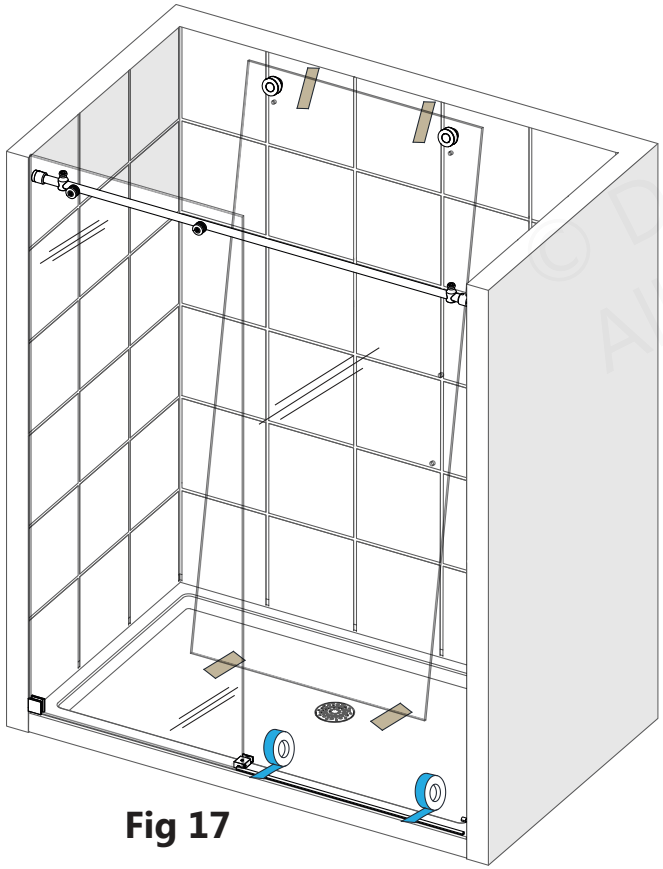

Fig 17

18

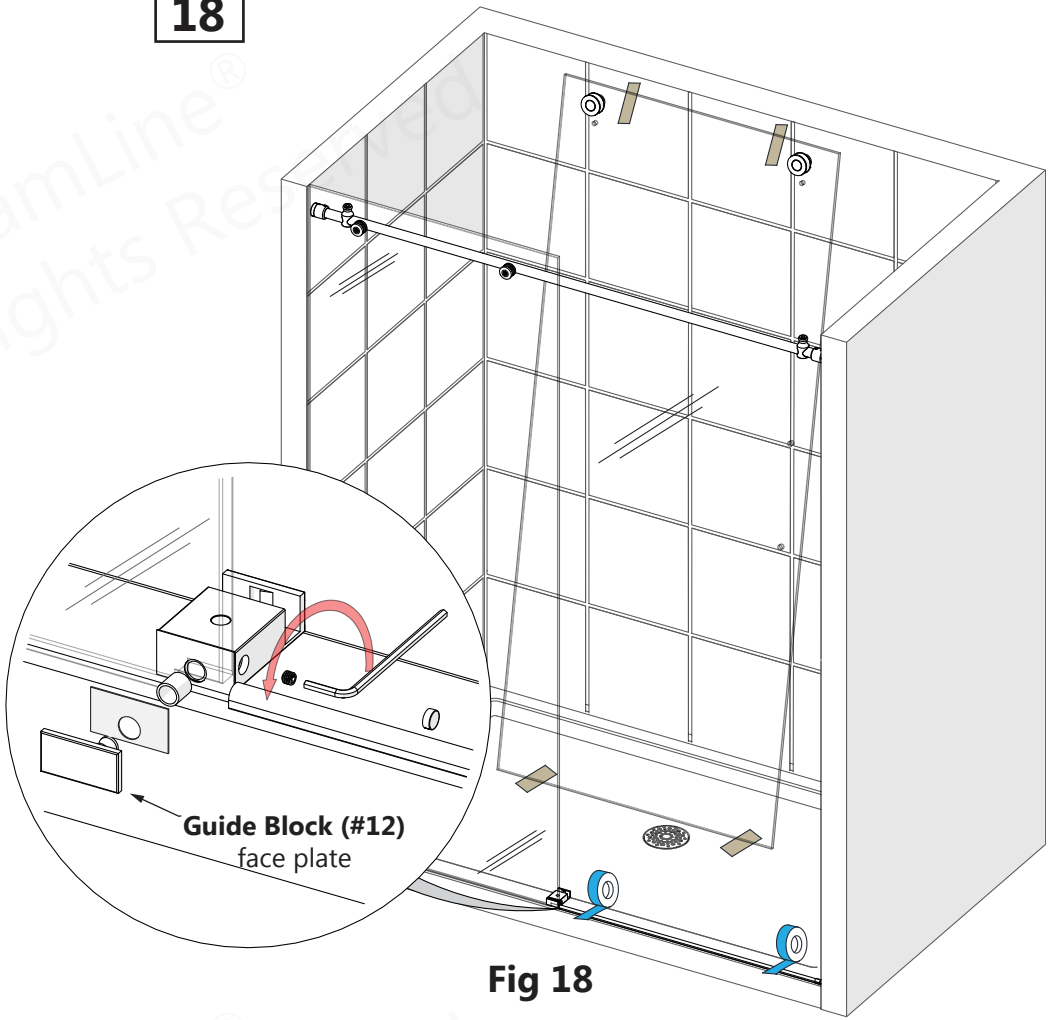

Fig 18

Parts Needed

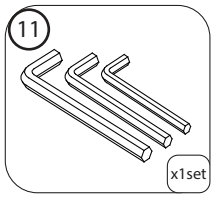

Tools Needed

TIP

Secure the **Dam Strip (#15)** to the threshold with several pieces of painter's tape until the silicone fully cures.

NOTE

Attach the **Guide Block face plate** to the installed **Guide Block (#12)**.

© DreamLine® All Rights Reserved

© 2019 DreamLine® All Rights Reserved

19

72" MODEL ONLY

1

2

3

Fig 19

20

4

Guide Block (#12)
face plate

outside

Fig 20

Parts Needed

19 x1

21 x1

22 x1

23 x1

Tools Needed

NOTE

Secure the **Dam Strip (#15)** to the threshold with several pieces of painter's tape until the silicone fully cures.

© 2019 DreamLine® All Rights Reserved

21

Upper Roller Assembly Installation

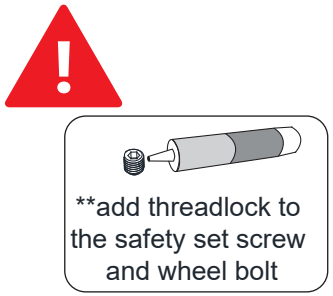

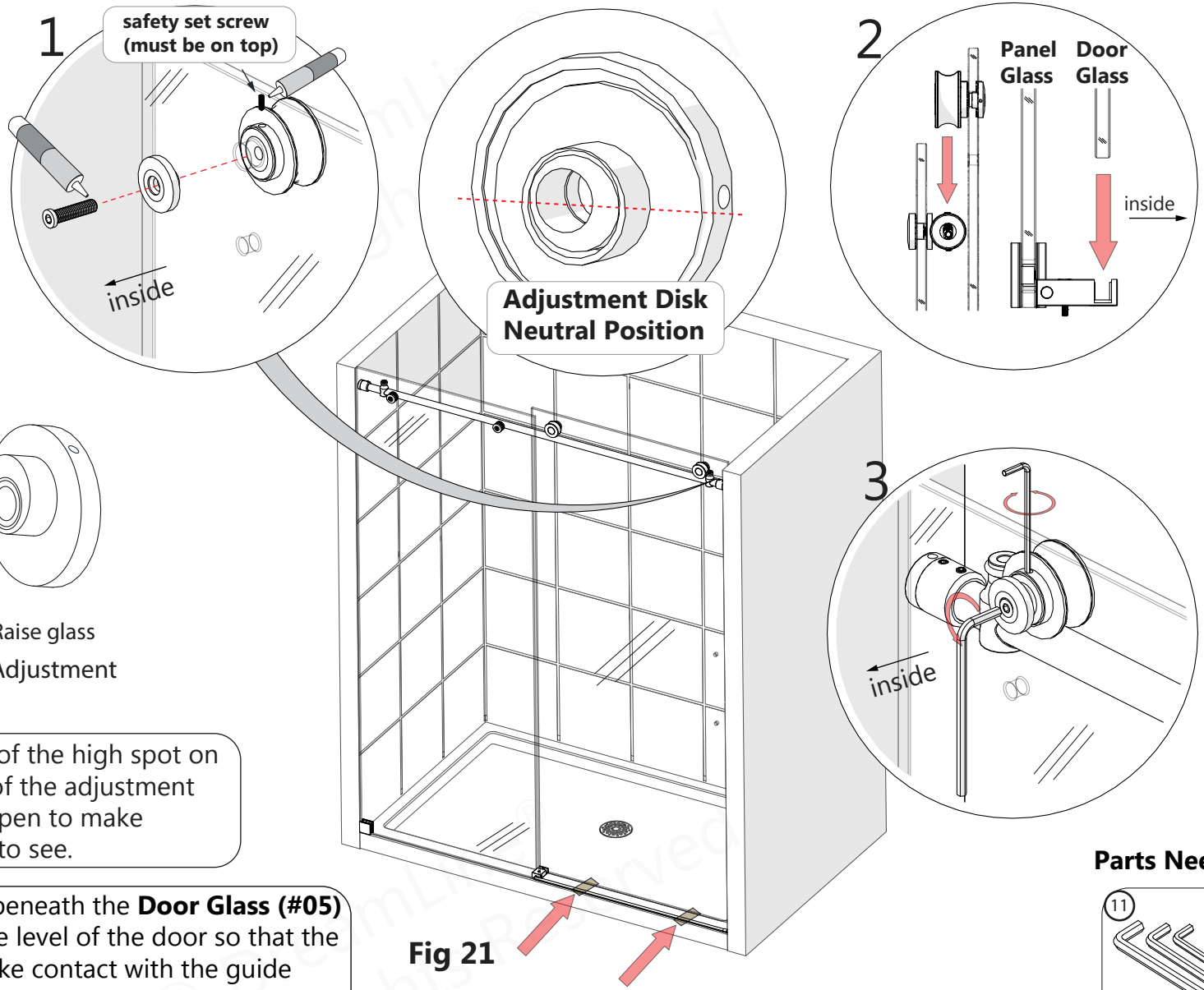

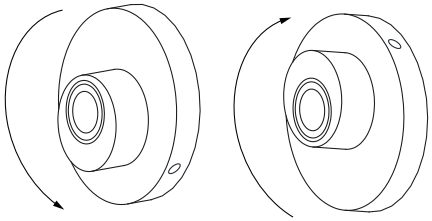

Roller Assembly Wheel Adjustment

Fig 21

TIP Mark the location of the high spot on the outer surface of the adjustment disk with a felt tip pen to make adjustment easier to see.

TIP Use a 3/16" shim beneath the **Door Glass (#05)** when adjusting the level of the door so that the glass does not make contact with the guide block.

NOTE The adjustment disks in the wheels are the same as the disks in the Glass-to-Rail Brackets and can be rotated to adjust the **Door Glass (#05)** to create a seal with the wall. The **Safety Set Screw on both Roller Assembly Wheels MUST be re-tightened after installation** to prevent the wheel bolt from becoming loose. Apply **Thread Lock Adhesive (#26)** during installation. **See detailed description on page 34**.

Parts Needed

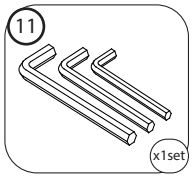

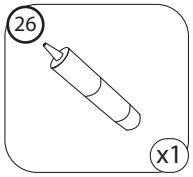

© 2019 DreamLine® All Rights Reserved

22

Lower Roller Assembly Installation

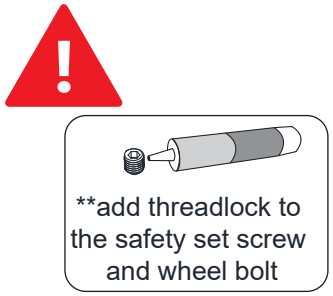

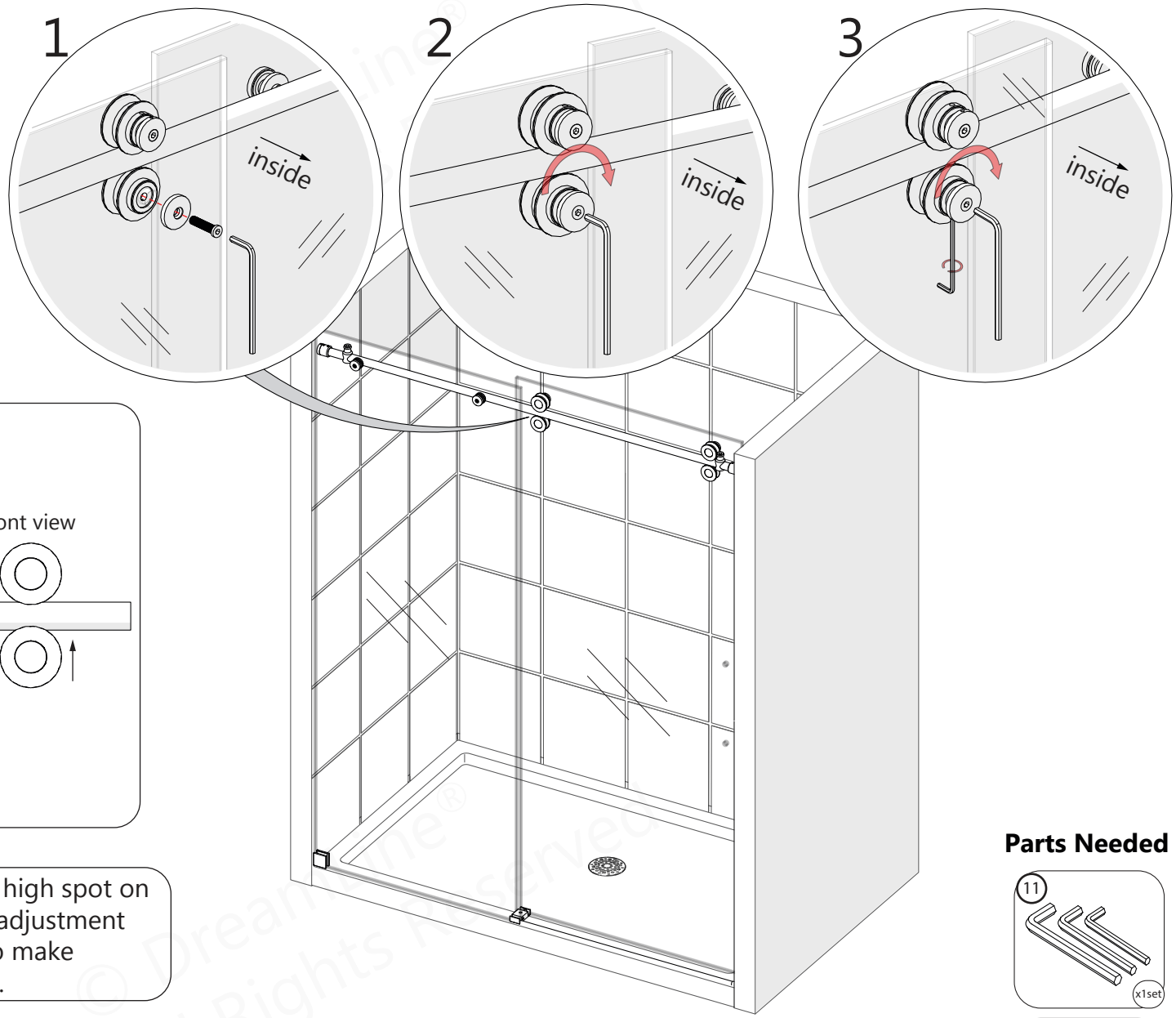

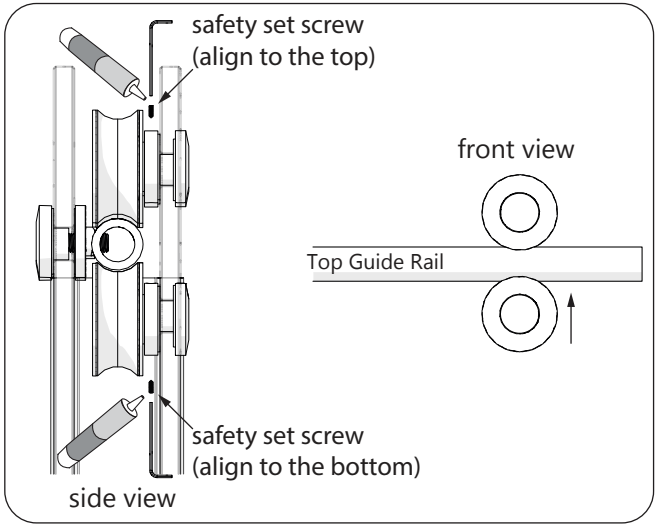

TIP Mark the location of the high spot on the outer surface of the adjustment disk with a felt tip pen to make adjustment easier to see.

NOTE The adjustment disks in the wheels are the same as the disks in the Glass-to-Rail Brackets and can be rotated to adjust the **Door Glass (#05)** to create a seal with the wall. The **Safety Set Screw on both Roller Assembly Wheels MUST be re-tightened after installation** to prevent the wheel bolt from becoming loose. Apply **Thread Lock Adhesive (#26)** during installation. **See detailed description on page 33**.

Parts Needed

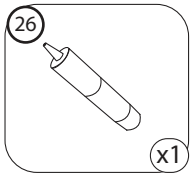

© 2019 DreamLine® All Rights Reserved

Roller Assembly Adjustment Procedure for: Enigma, Enigma-X, Enigma-XO

To create a good seal with the wall and to achieve minimal clearance beneath the door glass without making contact with the bottom guide block or threshold.
Have at least two 3/16" shims or wedge shims (to maintain space beneath the door glass) and an assistant available to help with this procedure.
Adjust only one wheel at a time. You may need to perform these steps more than once to get the desired results.

NOTE: Be sure to install the Bulb Vinyl Seal onto the edge of the door glass to protect the edge from contact with the wall during installation or adjustment.

CAUTION: The door glass is heavy and may require two people to safely accomplish these steps. **DO NOT** adjust the Roller Assemblies without first securing the door glass with shims, an assistant or both.

1. First, loosen and lower either the Roller Guards (Enigma-X) or Bottom Rollers (Enigma/Enigma-XO) to allow enough room to adjust the upper rollers.

2. Loosen the safety set screw on the roller (remove and apply a drop of thread lock if not done already)

3. Loosen the wheel bolt just enough so that you can rotate the adjustment disk. (remove and apply a drop of thread lock if not done already)

4. Rotate the adjustment disk to raise or lower the door slightly with help from an assistant. You can use a small tool (like an allen wrench) to aid in turning this disk by inserting it into the small hole on the edge of the adjustment disk.

5. While holding the adjustment disk in place, retighten the wheel bolt. Use a shim or have an assistant hold the door glass in place while you retighten the wheel bolt.

6. Once satisfied with the adjustment, **it is very important to re-tighten the safety set screw** to secure the wheel bolt in place.

7. For the Enigma-X: Reposition the roller guards approximately 1/16" beneath the guide rail and retighten.
For the Enigma and Enigma-XO: adjust the lower rollers to make contact with the guide rail using the same methods as described in the steps above.

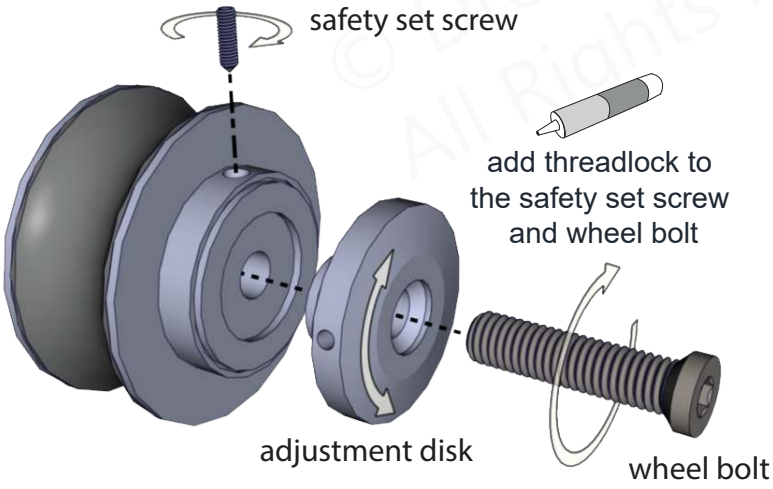

The provided Thread Lock will remain workable for approximatley 10-15 minutes before drying.

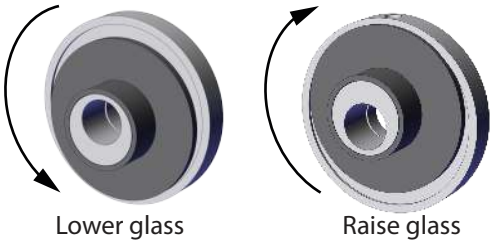

Roller wheel adjustment disks

©2019 DreamLine® All Rights Reserved

23

Vinyl Seals & Handle Installation

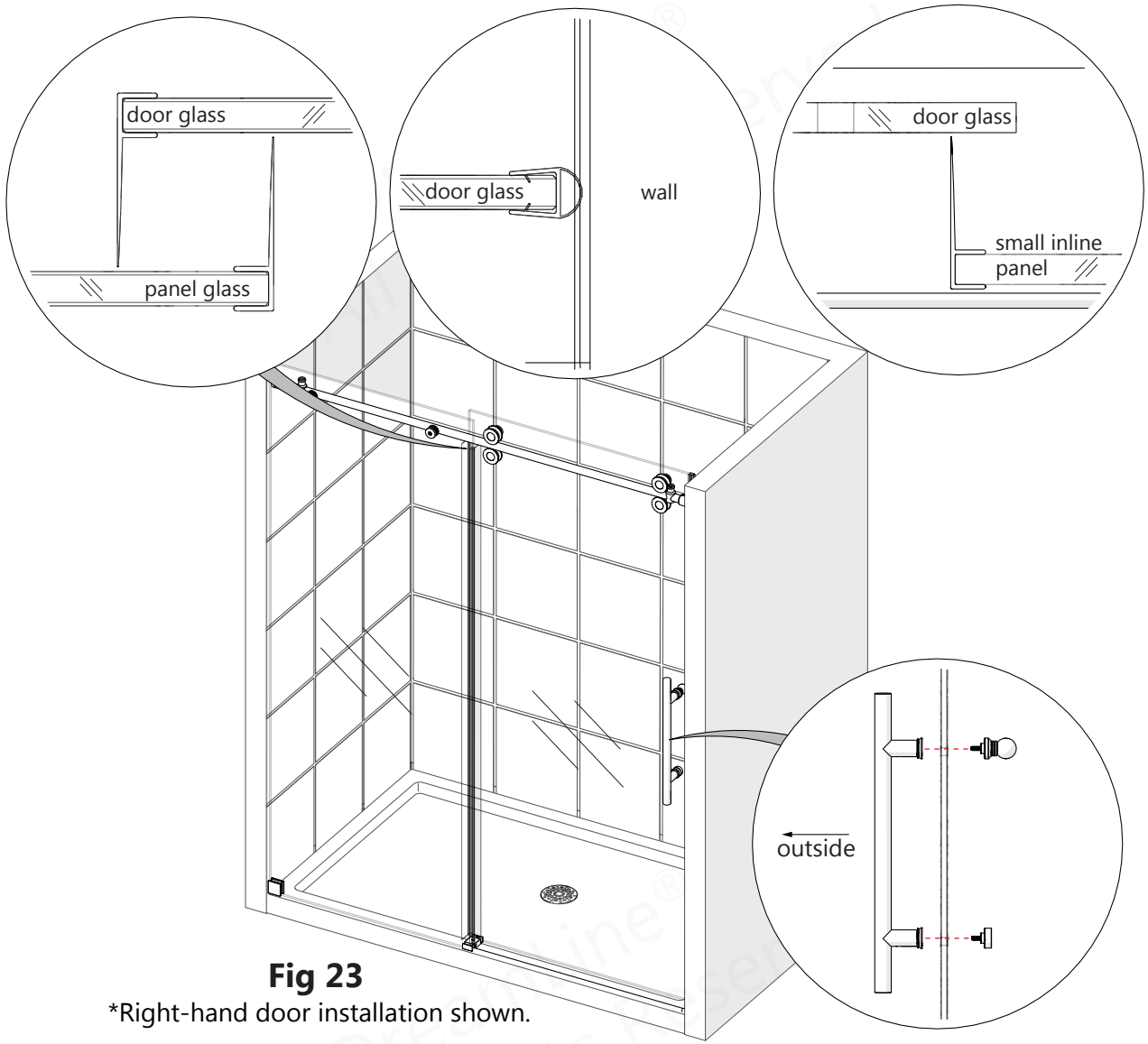

Fig 23

*Right-hand door installation shown.

NOTE

<u>For the 72" Model:</u> Attach the **Vertical Vinyl Seal (#14)** to the edge of the **Small Inline Panel Glass (#23)**. The **Bulb Vinyl Seal (#13)** is not necessary with the 72" model.

TIP

Use a razor knife to trim the **Vertical Vinyl Seal (#14)** at the top to avoid interfering with the **Roller Guards (#29)** and at the bottom where the door meets the **SafeStop™ Bumper (#30)**. **(Fig 23)**

Parts Needed

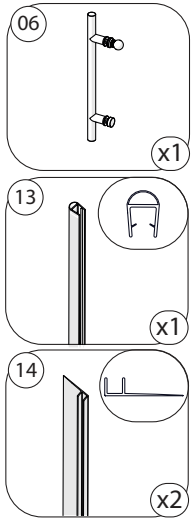

Tools Needed

© 2019 DreamLine® All Rights Reserved

24

Door Stopper Installation

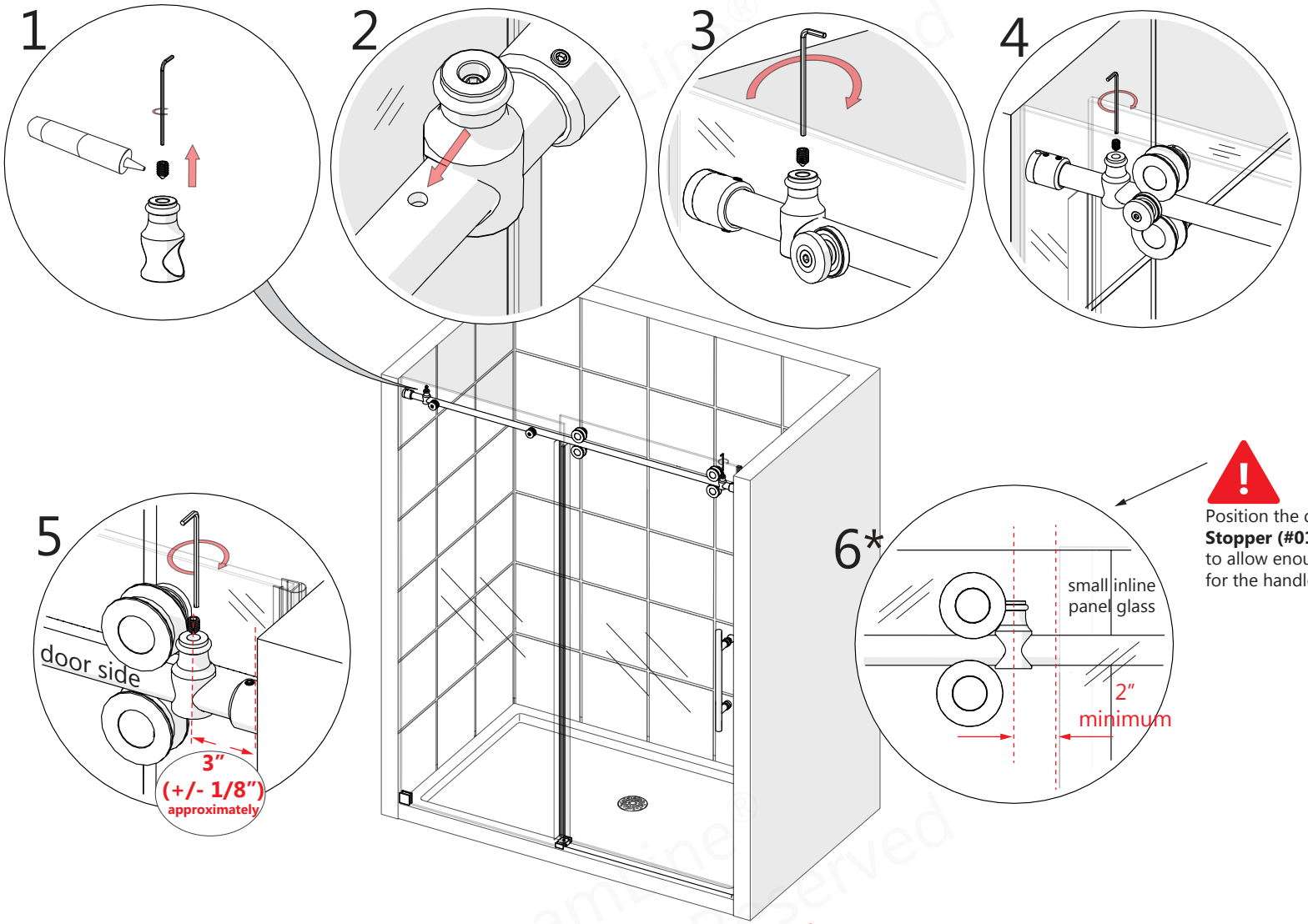

Position the door-side **Stopper (#01)** to allow enough clearance for the handle.

Door Stopper Installation:

1. Remove the set screw
2. Slide the **Door Stopper (#01)** onto the **Top Guide Rail (#03)**
3. Align with stopper hole in the guide rail (inline panel side only) **(Fig 24.2)**
4. Apply **Thread Lock Adhesive (#26)** to the set screw threads
5. Tighten screw into the stopper hole (inline panel side only)
6. Correctly position the door side stopper, use **Thread Lock Adhesive (#26)** and tighten the set screw. **(Fig 24.5)**

***For 72" Model**: Position the door-side **Stopper (#01)** at least 2" away from the small inline panel glass so that the handle cannot make contact with the glass when the door is in the closed position.

Parts Needed

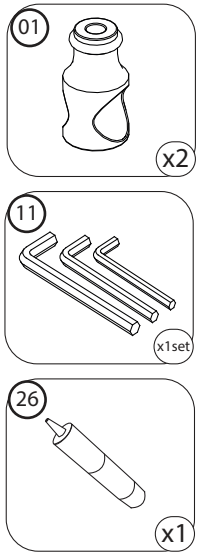

© 2019 DreamLine® All Rights Reserved

25

SafeStop™ Bumper Installation - Option 1

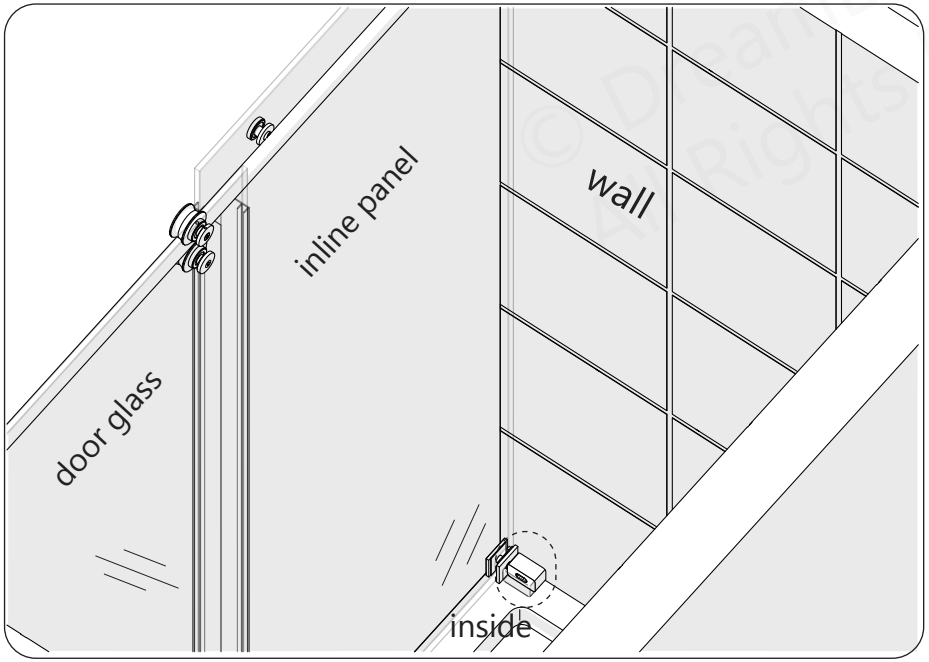

Fig 25

*Right-hand door installation shown.

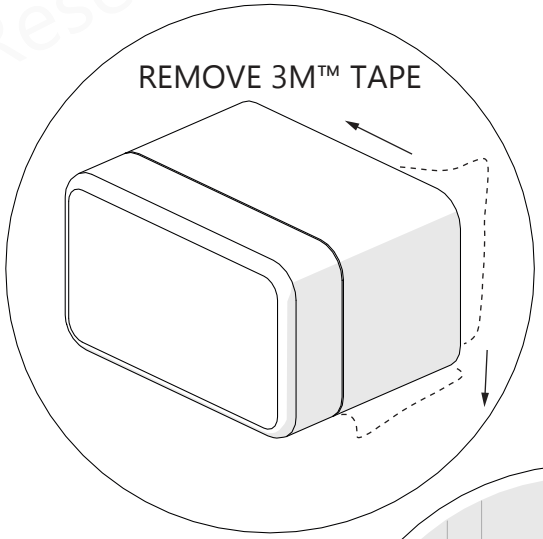

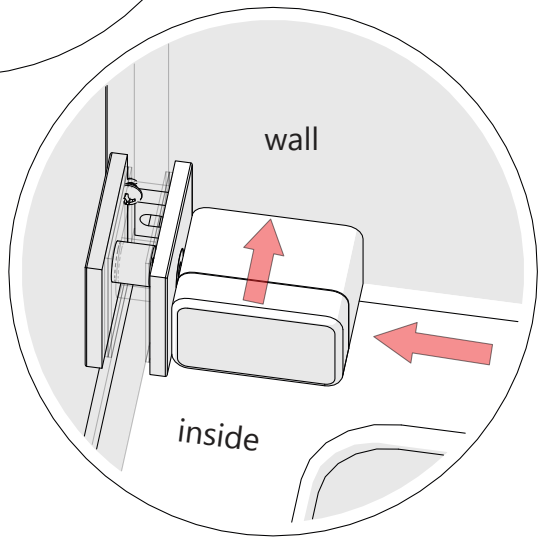

NOTE The **SafeStop™ Bumper (#30)** is reversible for left or right wall installation.

TIP Install the **SafeStop™ Bumper (#30)** using the **3M™** tape.
Screwing the **SafeStop™ Bumper** to the wall is optional **(see step 26*)**.

NOTE **The surfaces need to be clean and free of construction debris before installing the SafeStop™ Bumper (#30). Wipe the area with an alcohol swab before installation.**

Parts Needed

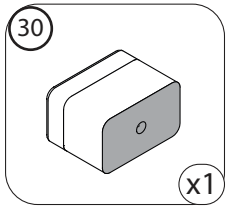

© 2019 DreamLine® All Rights Reserved

26

SafeStop™ Bumper Screw Installation - Option 2

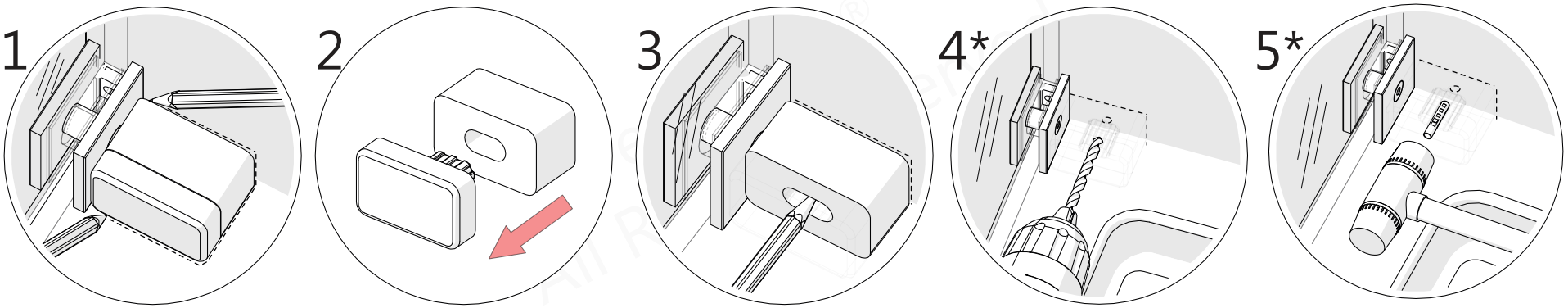

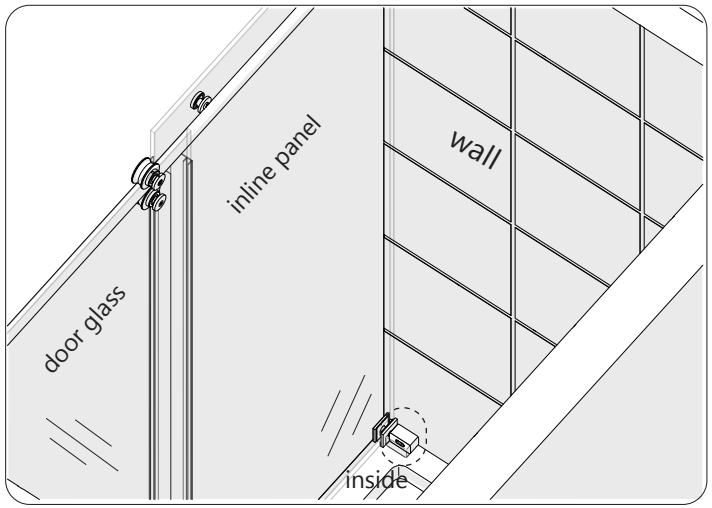

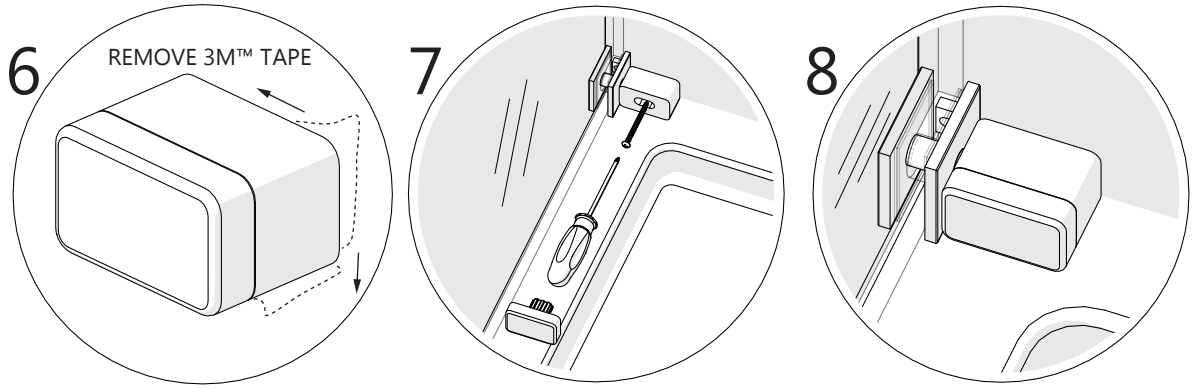

Fig 26
*Right-hand door installation shown.

Parts Needed

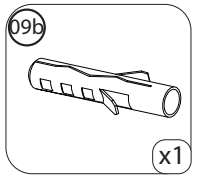

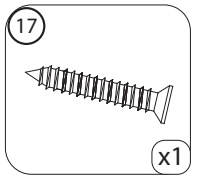

TIP

Extender driver bit recommended for screw installation.

NOTE

For installing the SafeStop™ Bumper::
- **<u>If a stud is present behind the wall</u>**: drill a **Ø3/16"(4mm)** hole up to the stud.

OR
- **<u>If no stud is present behind the wall</u>**: drill a **Ø5/16"(10mm)** hole and install the **Wall Anchor (#09b).**

Use caution to not damage/crack the wall/tile and to avoid any plumbing behind the wall when using the screw method .

NOTE

<u>For 72" Model:</u> This will be the side of the opening with the large stationary panel. Mark the position of the hole onto the wall. Drill the correct hole diameter (see Note above). Remove the 3M™ Tape and position the **SafeStop™ Bumper (#30)** onto the threshold against the **Wall Bracket (#19)** and attach using the **ST4.2 x 40 Countersunk Screw (#17). (Fig 26)**

Tools Needed

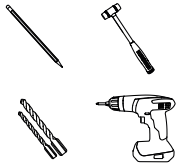

© 2019 DreamLine® All Rights Reserved

27

NOTE **The surfaces need to be clean and free of debris before applying silicone.**

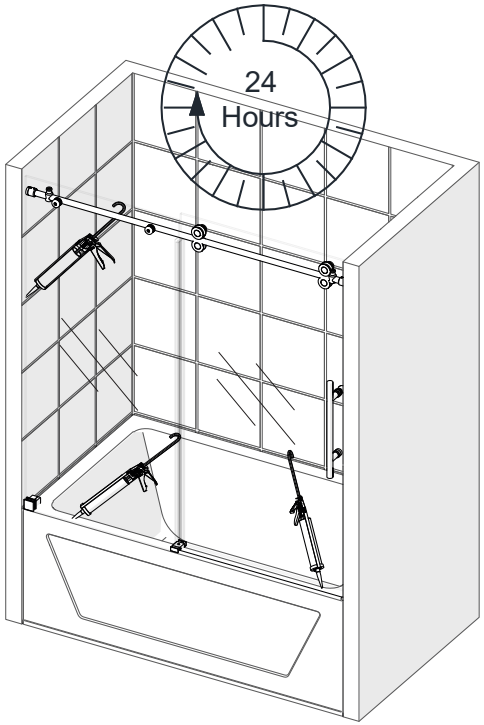

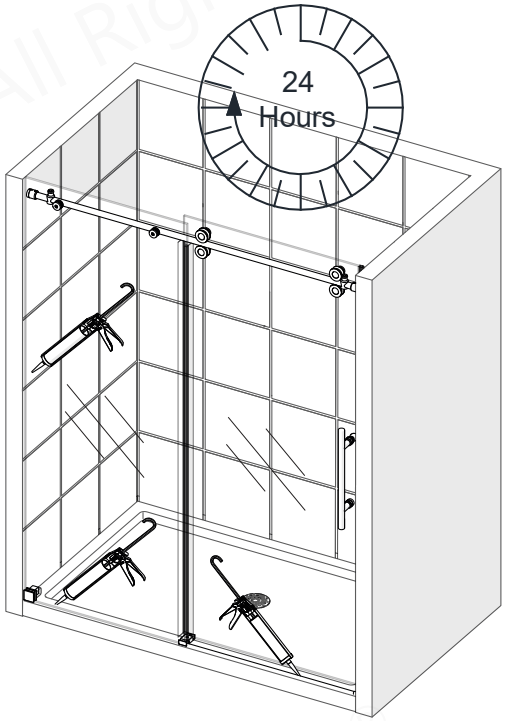

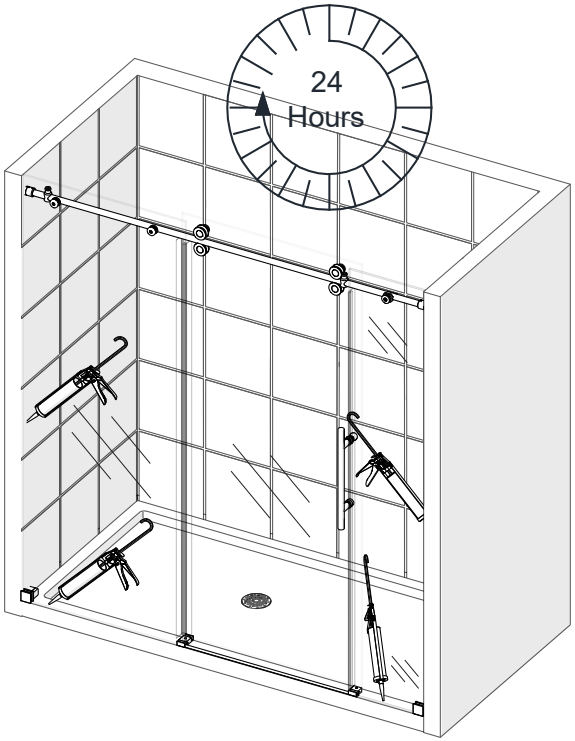

Allow 24 hours for the silicone to cure before using the shower.

DO NOT hang or drape a towel or wash cloth over the Enigma Top Guide Rail as this may cause the Roller Assembly wheels to get stuck and possibly cause serious damage or injury.

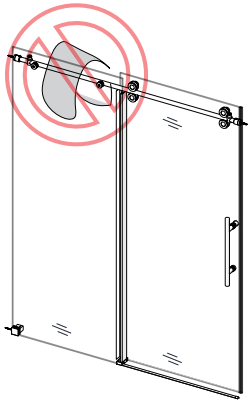

Tools Needed

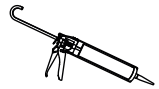

© DreamLine® All Rights Reserved

Product Maintenance

BASES and BACKWALLS: To ensure long lasting life for your acrylic back walls: wipe them off after each use with a soft cloth. To clean the acrylic back walls use non-abrasive sprays or cream based cleaners. Avoid the use of aerosol spray cleaners. Never use abrasive cleansers, metal brushes or scrapers that could permanently scratch or dull the surface.

GLASS: To ensure long lasting life for your glass shower products: wipe them off after each use with a soft cloth. Rinse and wipe off the glass using either a soft cloth or a squeegee to prevent soap buildup and water spots (Hard water can etch the surface of the glass over time if left to dry). To prevent scratching the surface: never use abrasive cleaners or cleaning products that contain scouring agents. Never use bristle brushes or abrasive sponges that may scratch the surface of the glass.

HARDWARE: To ensure a long lasting finish: wipe off all metal parts after each use with a soft cloth. Do not use abrasive cleaners or cleaning products containing ammonia, bleach or acid. If accidentally used, rinse the surface as soon as possible to prevent damage to the finish (peeling or corrosion). After cleaning the polished finishes, rinse thoroughly and wipe dry with a soft clean-cloth.
Clean stainless steel surfaces at least once a week. When applying stainless steel cleaner or polish to stainless steel hardware, work with the grain (not across the grain). Never use an abrasive sponge or cloth, steel wool or wired brush as these may permanently scratch the surfaces.

NOTE **To maximize the life of your door, it is important to regularly inspect the glass and other hardware for misalignment, proper attachment, and/or damage. Contact DreamLine® with any questions or concerns.**

ENIGMA-XO Maintenance Checklist

- ☐ **Guide Rail** level and tight
- ☐ **Guide Rail Brackets** tight to the wall
  - ☐ All set screws are tight and secured with threadlock
- ☐ **Panel Glass** secure
- ☐ **Panel Glass-to-Rail Brackets** tight
- ☐ **Guide Block** square to the threshold and glass
- ☐ Proper clearance beneath the Door Glass between the threshold and within the Guide Block
- ☐ **Door Glass** adjusted so that the **Bulb Vinyl Seal** makes even contact with the wall
- ☐ **Roller Wheel Assemblies** tight
  - ☐ **Roller Wheel Assembly bolts** tight
  - ☐ Roller Wheel Assembly **safety set screws** tight, accessible and set with threadlock
- ☐ **Door Stoppers** tight and positioned correctly
  - ☐ **Panel-side Door Stopper** installed into the pre-drilled hole in the Upper Guide Rail
  - ☐ Adequate **Handle clearance** when the door is fully open
  - ☐ **Door-side Door Stopper** positioned at approximately 3" (+/- 1/8") (as measured from the wall to the center of the stopper)
  - ☐ Check that the Stopper stops the door and the Bulb Vinyl Seal makes contact with the wall
- ☐ **SafeStop™ Bumper** secured to the wall
- ☐ **Bottom Roller Wheel Assemblies** should make contact with the Upper Guide Rail
- ☐ Remove Vertical Vinyl Seals **to inspect the edges of the door glass** for concealed damage
  - ☐ **Damaged Glass must be replaced!**
- ☐ Replace damaged or missing vinyl seals
- ☐ Inspect and replace silicone as necessary to prevent water leakage

©2019 DreamLine® All Rights Reserved

Troubleshooting

Problem/Symptom	Suggested Solution
Missing Parts	•Check all shipping/packaging material for missing parts/components. •If not found, contact DreamLine® Customer Support [1-866-731-2244] to order factory part replacement.
Top Guide Rail (#03) was cut too short or was cut from wrong end during installation.	•The Top Guide Rail (#03) is pre-cut for the model size, and will be shorter than the model width to allow for the Guide Rail Brackets (#08). •If the Top Guide Rail (#03) is cut too short or cut from the wrong end, contact DreamLine® Customer Support [1-866-731-2244] to order factory part replacement.
Water Leakage	•Confirm the **Dam Strip (#15)**, **Bulb Vinyl Strip (#13)**, and the **Vertical Vinyl Strips (#14)** are installed correctly. [see Page 34] •Confirm that the entire unit has been properly sealed with silicone caulk; allow at least 24 hours to allow the silicone to cure and set before using the shower unit. •Direct the shower head/water flow away from the area.
The door rolls open or closed	•Check the **Top Guide Rail (#03)** for level. Adjust the **Guide Rail Brackets (#08)** if necessary. [see Step 14] •Adjust the **Roller Wheel Assemblies (#04)** on the door, if needed, to allow the door to seal evenly against the wall. •To influence the **Top Guide Rail (#03)** slightly, the innermost **Glass-to-Rail Brackets (#07)** can be adjusted.
The door does not track smoothly	•Confirm the **Guide Block (#12)** is square to the **Panel Glass (#02)** and threshold. [see Steps 13a-136b] •Confirm the **Door Glass (#05)** is not making contact with the bottom of the **Guide Block (#12)**. •If the **Door Glass (#05)** needs to be raised, adjust the **Upper Roller Wheel Assemblies (#04)** to raise it. [see Pages 31-32] •Be sure that there is nothing on the **Top Guide Rail (#03)** that could block the **Roller Wheel Assemblies (#04)**. •Check the **Bottom Wheel Assemblies (#04)** are making contact with the **Top Guide Rail (#03).** [see Page 33]
Door travels too far in either direction	•Confirm both **Door Stoppers (#01)** are correctly installed and secured with the **Threadlock Adhesive (#26)**. •Check that the **Door Stopper (#01)** on the **Panel Glass (#02)** side is tightly installed into the hole on the **Top Guide Rail (#03)**. The **Door Stoppers (#01)** should stop the door glass, not the wall. [see Page 35]
Mishandled glass	•Always take precautions when handling tempered glass. •A glass suction cup and an assistant are helpful when carrying large, heavy lites of glass. •Never allow tempered glass (especially the edges) to come in contact with any hard surface, which can cause chipping, splintering or complete glass failure. •Any damaged glass should be immediately replaced. •Do not use a shower with damaged glass. •Leave plastic corner protectors on the glass until ready to install. •Always protect the glass once removed from the box by padding the top and bottom of the glass with cardboard, styrofoam or other soft material until ready to install.

TIP

Prior to contacting DreamLine® Customer Service, please have the following information readily available:
- Purchase Order Information
    - Name, PO Number, Dealer/Vendor Name, etc.
- SKU/Model Number (see Pages 41-44)
- Factory Part Information (see Pages 41-44)

©2019 DreamLine® All Rights Reserved

Factory Parts Information

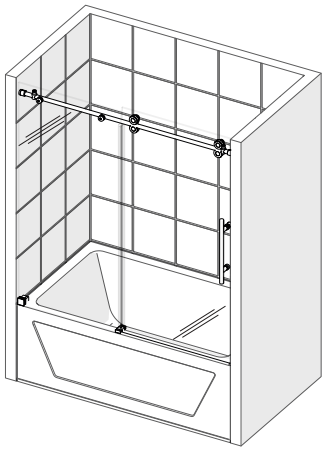

SHDR-61606220-##

60x62 ENIGMA-XO Tub {SHDR-61606220-##}		FACTORY PARTS INFORMATION	
ITEM #	**FACTORY PART NUMBER**	**ITEM DESCRIPTION**	**QTY**
01	0702**1**036 /0702**5**036 / 0702**6**036 / 0702**9**036	Door Stopper	2pcs
02	010112005	Inline Panel Glass	1pc
03	0712**1**044 / 0712**5**044 / 0712**6**044 / 0712**9**044	Top Guide Rail	1pc
04	0735**1**006 / 0735**5**006 / 0735**6**006 / 0735**9**006	Roller Assembly	4pcs
05	010114001	Door Glass	1pc
06	0722**1**003 / 0722**5**003 / 0722**6**003 / 0722**9**003	Handle	1pc
07	0702**1**104 / 0702**5**104 / 0702**6**104 / 0702**9**104	Glass-to-Rail Bracket	2pcs
08	0702**1**097 / 0702**5**097 / 0702**6**097 / 0702**9**097	Guide Rail Bracket	2pcs
09a	07550044	Wall Anchor 3/8" (10mm)	2pcs
09b	07550045	Wall Anchor 5/16" (8mm)	3pcs
10	090112	ST6x65 Large Truss Head Screw	2pcs
11	098003 / 098004 / 098005	Allen Wrench (3mm, 4mm, 5mm)	1set
12	0702**1**138 / 0702**4**138 / 0702**6**138 / 0702**9**138	Guide Block (with caps)	1pc
13	063007100-1565	Bulb Vinyl Seal	1pc
14	063027100-1436 & 063027100-1445	Vertical Vinyl Seal	2pcs
15	04100**0**1-0813 / 04100**0**4**1**-0813 / 04100**0**6**1**-0813 / 04100**0**9**1**-0813	Dam Strip	1pc
16	0755**1**068 / 0755**4**068 / 0755**6**068 / 0755**9**068	Dam Strip Cap	1pc
17	092108	ST4.2x40 Countersunk Screw	2pcs
18	090113	ST4.2x55 Truss Head Screw	1pcs
19	0702**1**004 / 0702**4**004 / 0702**6**004 / 0702**9**004	Wall Bracket	1pc
26	160012	Thread Lock Adhesive	1pc
30	0702**1**153 / 0702**4**153 / 0702**6**153 / 0702**9**153	SafeStop™ Bumper	1pc

BOLD digit indicates finish color:
1 or 8 = Polished SS
4 or 5 or 7 = Brushed SS
6 = Oil Rubbed Bronze
9 = Satin Black

Contact **Support@DreamLine.com** for Part replacement, installation assistance or additional information.
Complete **Warranty** information is available on **DreamLine.com**.

© DreamLine® All Rights Reserved

© 2019 DreamLine® All Rights Reserved

Factory Parts Information

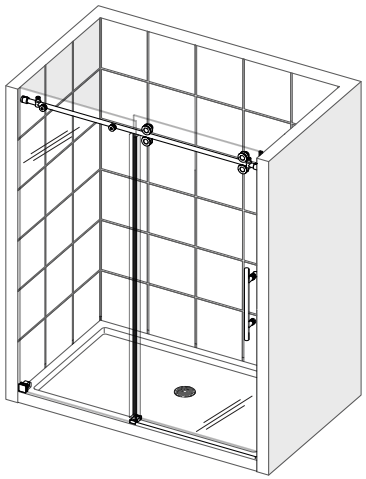

SHDR-61487620-##

48x76 ENIGMA-XO Shower {SHDR-61487620-##}		FACTORY PARTS INFORMATION	
ITEM #	**FACTORY PART NUMBER**	**ITEM DESCRIPTION**	**QTY**
01	0702**1**036 /0702**5**036 / 0702**6**036 / 0702**9**036	Door Stopper	2pcs
02	010112001	Panel Glass	1pc
03	0712**1**043 / 0712**5**043 / 0712**6**043 / 0712**9**043	Top Guide Rail	1pc
04	0735**1**006 / 0735**5**006 / 0735**6**006 / 0735**9**006	Roller Assembly	4pcs
05	010114003	Door Glass	1pc
06	0722**1**003 / 0722**5**003 / 0722**6**003 / 0722**9**003	Handle	1pc
07	0702**1**104 / 0702**5**104 / 0702**6**104 / 0702**9**104	Glass-to-Rail Bracket	2pcs
08	0702**1**097 / 0702**5**097 / 0702**6**097 / 0702**9**097	Guide Rail Bracket	2pcs
09a	07550044	Wall Anchor 3/8" (10mm)	2pcs
09b	07550045	Wall Anchor 5/16" (8mm)	3pcs
10	090112	ST6x65 Large Truss Head Screw	2pcs
11	098003 / 098004 / 098005	Allen Wrench (3mm, 4mm, 5mm)	1set
12	0702**1**138 / 0702**4**138 / 0702**6**138 / 0702**9**138	Guide Block (with caps)	1pc
13	063007100-1921	Bulb Vinyl Seal	1pc
14	063027100-1800 & 063027100-1791	Vertical Vinyl Seal	2pcs
15	04100**1**1-0660 / 04100**4**1-0660 / 04100**6**1-0660 / 04100**9**1-0660	Dam Strip	1pc
16	0755**1**068 / 0755**4**068 / 0755**6**068 / 0755**9**068	Dam Strip Cap	1pc
17	092108	ST4.2x40 Countersunk Screw	2pcs
18	090113	ST4.2x55 Truss Head Screw	1pcs
19	0702**1**004 / 0702**4**004 / 0702**6**004 / 0702**9**004	Wall Bracket	1pc
26	160012	Thread Lock Adhesive	1pc
30	0702**1**153 / 0702**4**153 / 0702**6**153 / 0702**9**153	SafeStop™ Bumper	1pc

BOLD digit indicates finish color:
1 or 8 = Polished SS
4 or 5 or 7 = Brushed SS
6 = Oil Rubbed Bronze
9 = Satin Black

Contact **Support@DreamLine.com** for Part replacement, installation assistance or additional information.
Complete **Warranty** information is available on **DreamLine.com**.

© 2019 DreamLine® All Rights Reserved

Factory Parts Information

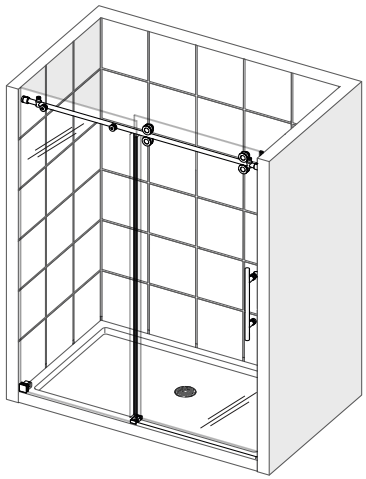

SHDR-51547620-##

54x76 ENIGMA-XO Shower {SHDR-61547620-##}		FACTORY PARTS INFORMATION	
ITEM #	**FACTORY PART NUMBER**	**ITEM DESCRIPTION**	**QTY**
01	0702**1**036 /0702**5**036 / 0702**6**036 / 0702**9**036	Door Stopper	2pcs
02	010114005	Panel Glass	1pc
03	0712**1**036 / 0712**5**036 / 0712**6**036 / 0712**9**036	Top Guide Rail	1pc
04	0735**1**006 / 0735**5**006 / 0735**6**006 / 0735**9**006	Roller Assembly	4pcs
05	010114004	Door Glass	1pc
06	0722**1**003 / 0722**5**003 / 0722**6**003 / 0722**9**003	Handle	1pc
07	0702**1**104 / 0702**5**104 / 0702**6**104 / 0702**9**104	Glass-to-Rail Bracket	2pcs
08	0702**1**097 / 0702**5**097 / 0702**6**097 / 0702**9**097	Guide Rail Bracket	2pcs
09a	07550044	Wall Anchor 3/8" (10mm)	2pcs
09b	07550045	Wall Anchor 5/16" (8mm)	3pcs
10	090112	ST6x65 Large Truss Head Screw	2pcs
11	098003 / 098004 / 098005	Allen Wrench (3mm, 4mm, 5mm)	1set
12	0702**1**138 / 0702**4**138 / 0702**6**138 / 0702**9**138	Guide Block (with caps)	1pc
13	063007100-1921	Bulb Vinyl Seal	1pc
14	063027100-1800 & 063027100-1791	Vertical Vinyl Seal	2pcs
15	0410001**1**-736 / 0410004**1**-736 / 0410006**1**-736 / 0410009**1**-736	Dam Strip	1pc
16	0755**1**068 / 0755**4**068 / 0755**6**068 / 0755**9**068	Dam Strip Cap	1pc
17	092108	ST4.2x40 Countersunk Screw	2pcs
18	090113	ST4.2x55 Truss Head Screw	1pcs
19	0702**1**004 / 0702**4**004 / 0702**6**004 / 0702**9**004	Wall Bracket	1pc
26	160012	Thread Lock Adhesive	1pc
30	0702**1**153 / 0702**4**153 / 0702**6**153 / 0702**9**153	SafeStop™ Bumper	1pc

BOLD digit indicates finish color:
1 or 8 = Polished SS
4 or 5 or 7 = Brushed SS
6 = Oil Rubbed Bronze
9 = Satin Black

Contact **Support@DreamLine.com** for Part replacement, installation assistance or additional information.
Complete **Warranty** information is available on **DreamLine.com**.

© 2019 DreamLine® All Rights Reserved

Factory Parts Information

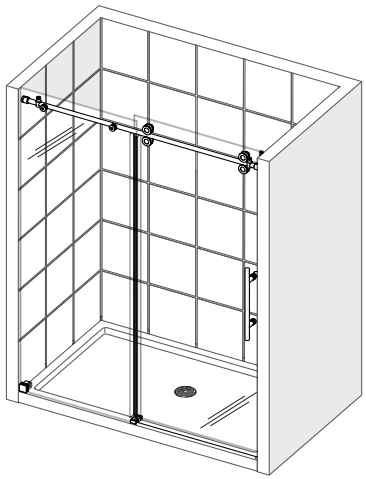

SHDR-61607620-##

60x76 ENIGMA-XO Shower {SHDR-61607620-##}		FACTORY PARTS INFORMATION	
ITEM #	**FACTORY PART NUMBER**	**ITEM DESCRIPTION**	**QTY**
01	0702**1**036 /0702**5**036 / 0702**6**036 / 0702**9**036	Door Stopper	2pcs
02	010112002	Panel Glass	1pc
03	0712**1**044 / 0712**5**044 / 0712**6**044 / 0712**9**044	Top Guide Rail	1pc
04	0735**1**006 / 0735**5**006 / 0735**6**006 / 0735**9**006	Roller Assembly	4pcs
05	010114002	Door Glass	1pc
06	0722**1**003 / 0722**5**003 / 0722**6**003 / 0722**9**003	Handle	1pc
07	0702**1**104 / 0702**5**104 / 0702**6**104 / 0702**9**104	Glass-to-Rail Bracket	2pcs
08	0702**1**097 / 0702**5**097 / 0702**6**097 / 0702**9**097	Guide Rail Bracket	2pcs
09a	07550044	Wall Anchor 3/8" (10mm)	2pcs
09b	07550045	Wall Anchor 5/16" (8mm)	3pcs
10	090112	ST6x65 Large Truss Head Screw	2pcs
11	098003 / 098004 / 098005	Allen Wrench (3mm, 4mm, 5mm)	1set
12	0702**1**138 / 0702**4**138 / 0702**6**138 / 0702**9**138	Guide Block (with caps)	1pc
13	063007100-1921	Bulb Vinyl Seal	1pc
14	063027100-1800 & 063027100-1791	Vertical Vinyl Seal	2pcs
15	0410001**1**-0813 / 0410004**1**-0813 / 0410006**1**-0813 / 0410009**1**-0813	Dam Strip	1pc
16	0755**1**068 / 0755**4**068 / 0755**6**068 / 0755**9**068	Dam Strip Cap	1pc
17	092108	ST4.2x40 Countersunk Screw	2pcs
18	090113	ST4.2x55 Truss Head Screw	1pcs
19	0702**1**004 / 0702**4**004 / 0702**6**004 / 0702**9**004	Wall Bracket	1pc
26	160012	Thread Lock Adhesive	1pc
30	0702**1**153 / 0702**4**153 / 0702**6**153 / 0702**9**153	SafeStop™ Bumper	1pc

BOLD digit indicates finish color:
1 or 8 = Polished SS
4 or 5 or 7 = Brushed SS
6 = Oil Rubbed Bronze
9 = Satin Black

Contact **Support@DreamLine.com** for Part replacement, installation assistance or additional information.
Complete **Warranty** information is available on **DreamLine.com**.

© 2019 DreamLine® All Rights Reserved

Factory Parts Information

72" MODEL ONLY

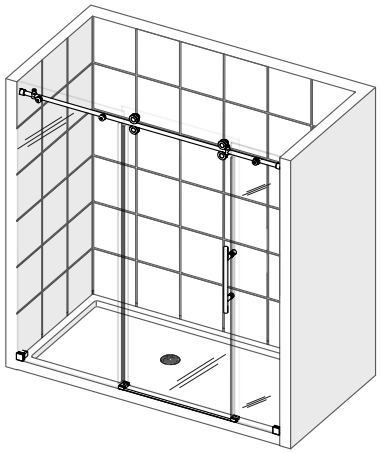

SHDR-61727620-##

(SHDR-61607620-##) + (SHDR-61127620-##)

60x76 ENIGMA-XO Shower {SHDR-61607620-##}		FACTORY PARTS INFORMATION	
ITEM #	**FACTORY PART NUMBER**	**ITEM DESCRIPTION**	**QTY**
01	0702**1**036 /0702**5**036 / 0702**6**036 / 0702**9**036	Door Stopper	2pcs
02	010112002	Panel Glass	1pc
04	0735**1**006 / 0735**5**006 / 0735**6**006 / 0735**9**006	Roller Assembly	4pcs
05	010114002	Door Glass	1pc
06	0722**1**003 / 0722**5**003 / 0722**6**003 / 0722**9**003	Handle	1pc
07	0702**1**104 / 0702**5**104 / 0702**6**104 / 0702**9**104	Glass-to-Rail Bracket	2pcs
08	0702**1**097 / 0702**5**097 / 0702**6**097 / 0702**9**097	Guide Rail Bracket	2pcs
09a	07550044	Wall Anchor 3/8" (10mm)	2pcs
09b	07550045	Wall Anchor 5/16" (8mm)	3pcs
10	090112	ST6x65 Large Truss Head Screw	2pcs
11	098003 / 098004 / 098005	Allen Wrench (3mm, 4mm, 5mm)	1set
12	0702**1**138 / 0702**4**138 / 0702**6**138 / 0702**9**138	Guide Block (with caps)	1pc
14	063027100-1800 & 063027100-1791	Vertical Vinyl Seal	2pcs
15	0410001**1**-0770 / 0410004**1**-0770 / 0410006**1**-0770 / 0410009**1**-0770	Dam Strip (for 72")	1pc
16	0755**1**068 / 0755**4**068 / 0755**6**068 / 0755**9**068	Dam Strip Cap	1pc
17	092108	ST4.2x40 Countersunk Screw	2pcs
18	090113	ST4.2x55 Truss Head Screw	1pcs
19	0702**1**004 / 0702**4**004 / 0702**6**004 / 0702**9**004	Wall Bracket	1pc
26	160012	Thread Lock Adhesive	1pc
30	0702**1**153 / 0702**4**153 / 0702**6**153 / 0702**9**153	SafeStop™ Bumper	1pc

12x76 ENIGMA-XO Small Inline Panel Glass {SHDR-61127620-##}		FACTORY PARTS INFORMATION	
ITEM #	**FACTORY PART NUMBER**	**ITEM DESCRIPTION**	**QTY**
09b	07550045	Wall Anchor 5/16" (8mm)	2pcs
11	098003 / 098004 / 098005	Allen Wrench (3mm, 4mm, 5mm)	1set
14	063018100-1800	Vertical Vinyl Seal	1pc
18	090113	ST4.2x55 Truss Head Screw	1pc
19	0702**1**004 / 0702**4**004 / 0702**6**004 / 0702**9**004	Wall Bracket	1pc
21	0702**1**043 / 0702**5**043 / 0702**6**043 / 0702**9**043	Small Inline Panel Glass-to-Rail Bracket	1pc
22	0702**1**005 / 0702**4**005 / 0702**6**005	Small Inline Panel Glass Bottom Bracket	1pc
23	010113003	Small Inline Panel Glass	1pc
24	0712**1**045 / 0712**5**045 / 0712**6**045	Top Guide Rail (for 72")	1pc
25	091107	ST4.2x40 Countersunk Screw	1pc

BOLD digit indicates finish color:
1 or 8 = Polished SS
4 or 5 or 7 = Brushed SS
6 = Oil Rubbed Bronze
9 = Satin Black

Contact **Support@DreamLine.com** for Part replacement, installation assistance or additional information.
Complete **Warranty** information is available on **DreamLine.com**.

© 2019 DreamLine® All Rights Reserved

© DreamLine®
All Rights Reserved

DREAMLINE®
dream in style

© DreamLine®
All Rights Reserved

TEL: 866-731-2244
FAX: 866-857-3638
DREAMLINE.COM

For more information on DreamLine® Shower Doors and Enclosures please visit **DreamLine.com**

©2019 DreamLine® All Rights Reserved