WATER CREATION

MODEL: MADALYN 72GB

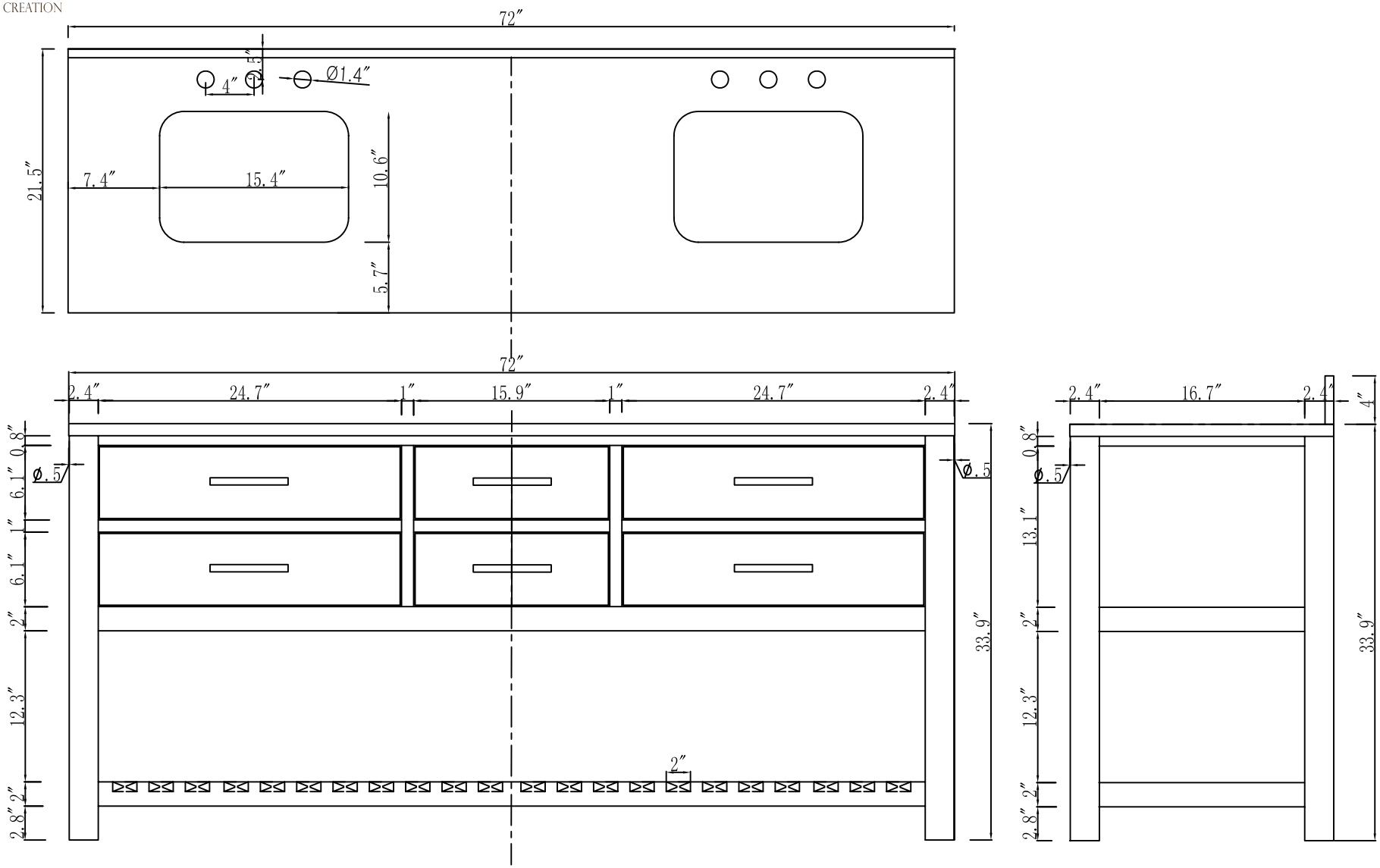

www.water-creation.com 1926 E. Cedar St., Ontario, CA 91761 Tel: 909-773-1777 Fax: 909-773-1077

WATER CREATION

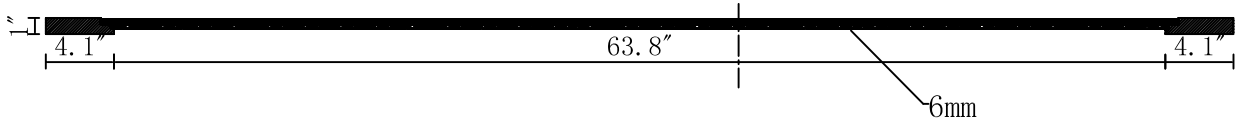

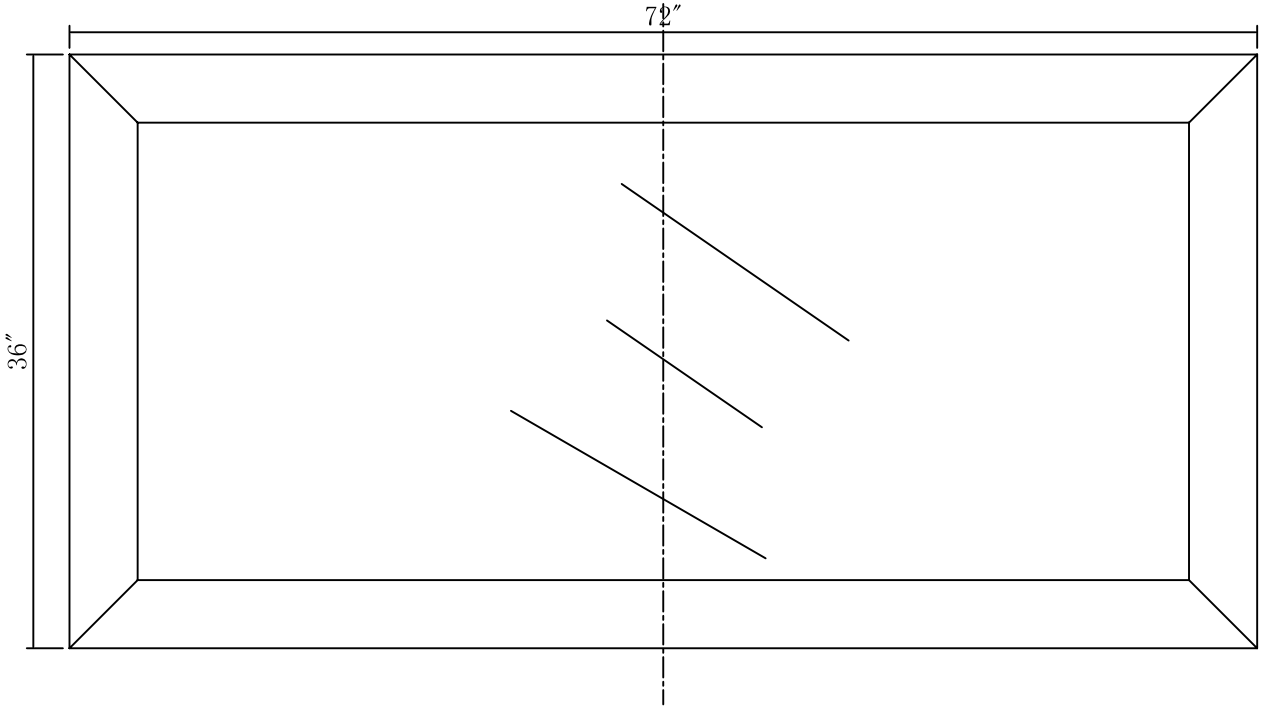

www.water-creation.com 1926 E. Cedar St., Ontario, CA 91761 Tel: 909-773-1777 Fax: 909-773-1077