KGD-50

33 Inch Dual Mount Double Bowl Granite Kitchen Sink

Kräus

SPECIFICATION SHEET

Sink Dimensions
Overall Dimensions: 33" x 22"
Larger Bowl Dimensions: 15 1/4" x 18 1/2"
Smaller Bowl Dimensions: 12 7/8" x 16"
Bowl Depth: 8 7/8"

Features
- Granite Composite Construction
- Dual Mount Double Bowl Sink
- 60/40 Split
- Required Minimum Cabinet Size: 36" Left to Right, 24" Front to Back
- Rear Off-Set Drains
- 3 1/2" Drain Openings

Accessories Included
- Strainer ST-2 x2
- Mounting Hardware
- Cut-out Template
- Silicone Mitt KSM-1BLACK
- Silicone Trivet KST-1BLACK

Available Colors
- Black
- Grey

CODES/STANDARDS:
Product Certification
ASME A112.19.3/CSA B45.4, cUPC certified

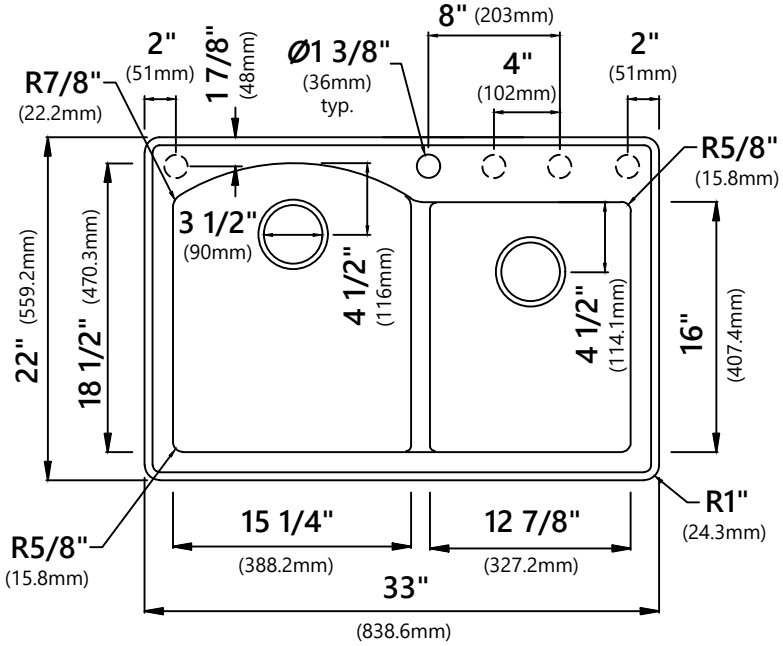

Note: Although Kraus granite and quartz composite sinks are highly heat resistant, placing hot items right from the stove or oven directly into the sink may cause surface discoloration. Consider using a trivet or rolling mat for extremely hot items to avoid potential heat damage.

Warranty
Kraus Limited Lifetime Warranty
see website for details **www.kraususa.com**

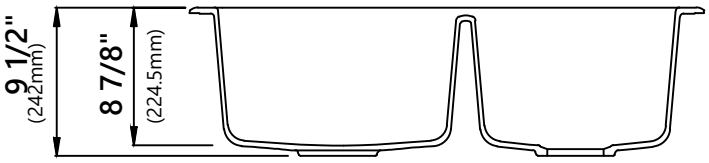

Kraus USA Customer Service
1.800.775.0703 | customerservice@kraususa.com

REV. December 1, 2020