ITEM NO.	PART NUMBER	DESCRIPTION	QTY.
1	TU34-4	BOTTOM TUBE	1
2	BLIT-34	End Ball	1
3	CH-2	CONNECTOR 1	1
4	PIN-1	PIN	1
5	Card-1	END LOCK	2

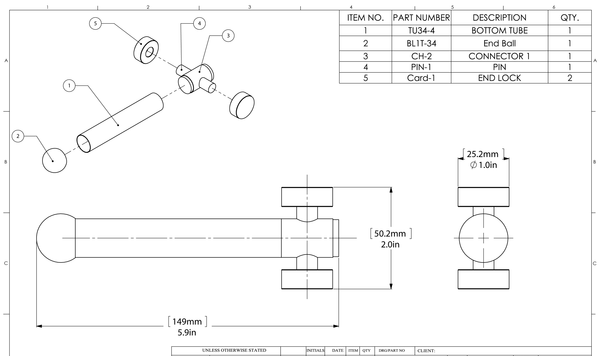

CONFIDENTIALITY/LIMITED LIABILITY STATEMENT
This document (and any files attached to it) is confidential and intended only for the person or entity to which it is delivered. If you are not the intended recipient, then you have received this document by mistake and any use, dissemination, forwarding, printing or copying of the document and/or the attachments is prohibited. Please notify ALLIED GROUNDS immediately either by telephone or by email, delete the mistakenly received document and destroy any copies made of it. We do not accept any liability for any loss or damage which may arise from your receipt of this document.

UNLESS OTHERWISE STATED
DO NOT SCALE DRAWING — X.XXX ±0.005, X.XX ±0.1, X.X ±0.25, X ±0.75
CHAMFER ALL EDGES 0.15x45°
DRAWING ISO — ANGLES X.XX ±0.08°, X.X ±0.5°, X ±0.0°
FIRST ANGLE PROJECTION — MACHINED FINISH 3.2

	INITIALS	DATE	ITEM	QTY	DRG/PART NO	CLIENT:
DESIGNED	LIM		MATERIAL		BEAM	WEIGHT:
DRAWN	LIM		HEAT TREAT		NA	
CHECKED	R. ANDRES		CUSTOMER			
PROG ENG						
SAFETY						
APPROVED	R. ANDRES					
FILENAME	CH-94-AS001					

FINISH: TBD
QUANTITY:
CUSTOMER No:
DESCRIPTION: BOTTOM ASSY
DRAWING No.: CH-94-AS001
REV: 0
SCALE: 1:1 | SHEET: 01 | A4

ITEM NO.	PART NUMBER	DESCRIPTION	QTY.
1	CNT-1	CONNECTOR 2	1
T	RD-1	THREADED ROD	1

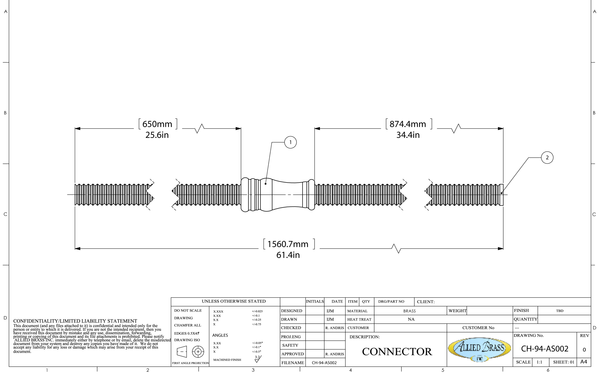

CONFIDENTIALITY/LIMITED LIABILITY STATEMENT
This document (and any files attached to it) is confidential and intended only for the person or entity to which it is delivered. If you are not the intended recipient, then you have received this document by mistake and any use, dissemination, forwarding, printing or copying of the document and/or the attachments is prohibited. Please notify ALLIED GROUNDS immediately either by telephone or by email, delete the mistakenly received document and destroy any copies made of it. We do not accept any liability for any loss or damage which may arise from your receipt of this document.

UNLESS OTHERWISE STATED
DO NOT SCALE DRAWING — X.XXX ±0.005, X.XX ±0.1, X.X ±0.25, X ±0.75
CHAMFER ALL EDGES 0.15x45°
DRAWING ISO — ANGLES X.XX ±0.08°, X.X ±0.5°, X ±0.0°
FIRST ANGLE PROJECTION — MACHINED FINISH 3.2

	INITIALS	DATE	ITEM	QTY	DRG/PART NO	CLIENT:
DESIGNED	LIM		MATERIAL		BEAM	WEIGHT:
DRAWN	LIM		HEAT TREAT		NA	
CHECKED	R. ANDRES		CUSTOMER			
PROG ENG						
SAFETY						
APPROVED	R. ANDRES					
FILENAME	CH-94-AS002					

FINISH: TBD
QUANTITY:
CUSTOMER No:
DESCRIPTION: CONNECTOR
DRAWING No.: CH-94-AS002
REV: 0
SCALE: 1:1 | SHEET: 01 | A4

ITEM NO.	PART NUMBER	DESCRIPTION	QTY.
1	CH94-AS001	BOTTOM ASSY	1
2	CH94-AS002	CONNECTOR 2	1
3	TU34-30	LONG TUBE	2
4	CRRD-34	RING	3
5	FRBP	BASE PLATE	1
6	CH-1	BASE TUBE	1

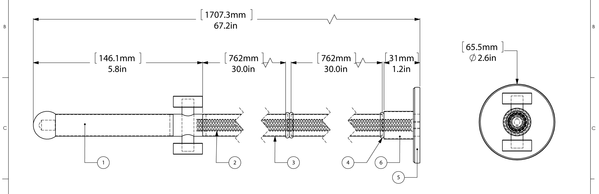

CONFIDENTIALITY/LIMITED LIABILITY STATEMENT
This document (and any files attached to it) is confidential and intended only for the person or entity to which it is delivered. If you are not the intended recipient, then you have received this document by mistake and any use, dissemination, forwarding, printing or copying of the document and/or the attachments is prohibited. Please notify ALLIED GROUNDS immediately either by telephone or by email, delete the mistakenly received document and destroy any copies made of it. We do not accept any liability for any loss or damage which may arise from your receipt of this document.

UNLESS OTHERWISE STATED
DO NOT SCALE DRAWING — X.XXX ±0.005, X.XX ±0.1, X.X ±0.25, X ±0.75
CHAMFER ALL EDGES 0.15x45°
DRAWING ISO — ANGLES X.XX ±0.08°, X.X ±0.5°, X ±0.0°
FIRST ANGLE PROJECTION — MACHINED FINISH 3.2

	INITIALS	DATE	ITEM	QTY	DRG/PART NO	CLIENT:
DESIGNED	LIM		MATERIAL		BEAM	WEIGHT:
DRAWN	LIM		HEAT TREAT		NA	
CHECKED	R. ANDRES		CUSTOMER			
PROG ENG						
SAFETY						
APPROVED	R. ANDRES					
FILENAME	CH-94-AS003					

FINISH: TBD
QUANTITY:
CUSTOMER No:
DESCRIPTION: SINGLE ASSY
DRAWING No.: CH-94-AS003
REV: 0
SCALE: 1:1.75 | SHEET: 01 | A4

ITEM NO.	PART NUMBER	DESCRIPTION	QTY.
1	CH94-AS003	SINGLE ASSY	2
2	MRAT-94	MIRROR	2

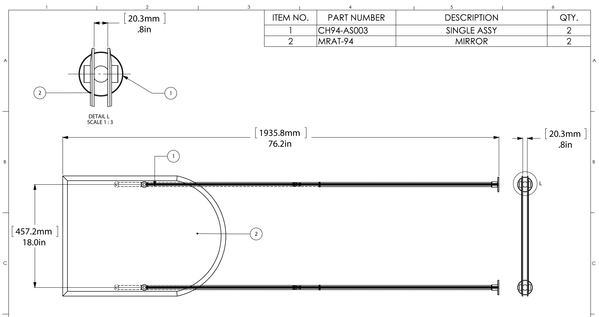

CONFIDENTIALITY/LIMITED LIABILITY STATEMENT
This document (and any files attached to it) is confidential and intended only for the person or entity to which it is delivered. If you are not the intended recipient, then you have received this document by mistake and any use, dissemination, forwarding, printing or copying of the document and/or the attachments is prohibited. Please notify ALLIED GROUNDS immediately either by telephone or by email, delete the mistakenly received document and destroy any copies made of it. We do not accept any liability for any loss or damage which may arise from your receipt of this document.

UNLESS OTHERWISE STATED
DO NOT SCALE DRAWING — X.XXX ±0.005, X.XX ±0.1, X.X ±0.25, X ±0.75
CHAMFER ALL EDGES 0.15x45°
DRAWING ISO — ANGLES X.XX ±0.08°, X.X ±0.5°, X ±0.0°
FIRST ANGLE PROJECTION — MACHINED FINISH 3.2

	INITIALS	DATE	ITEM	QTY	DRG/PART NO	CLIENT:
DESIGNED	LIM		MATERIAL		BEAM	WEIGHT:
DRAWN	LIM		HEAT TREAT		NA	
CHECKED	R. ANDRES		CUSTOMER			
PROG ENG						
SAFETY						
APPROVED	R. ANDRES					
FILENAME	CH-94-AS004					

FINISH: TBD
QUANTITY:
CUSTOMER No:
DESCRIPTION: BOTTOM ASSY
DRAWING No.: CH-94-AS004
REV: 0
SCALE: 1:9 | SHEET: 01 | A4

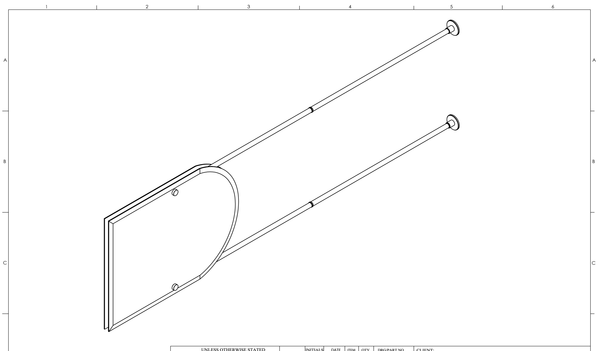

CONFIDENTIALITY/LIMITED LIABILITY STATEMENT
This document (and any files attached to it) is confidential and intended only for the person or entity to which it is delivered. If you are not the intended recipient, then you have received this document by mistake and any use, dissemination, forwarding, printing or copying of the document and/or the attachments is prohibited. Please notify ALLIED GROUNDS immediately either by telephone or by email, delete the mistakenly received document and destroy any copies made of it. We do not accept any liability for any loss or damage which may arise from your receipt of this document.

UNLESS OTHERWISE STATED
DO NOT SCALE DRAWING — X.XXX ±0.005, X.XX ±0.1, X.X ±0.25, X ±0.75
CHAMFER ALL EDGES 0.15x45°
DRAWING ISO — ANGLES X.XX ±0.08°, X.X ±0.5°, X ±0.0°
FIRST ANGLE PROJECTION — MACHINED FINISH 3.2

	INITIALS	DATE	ITEM	QTY	DRG/PART NO	CLIENT:
DESIGNED	LIM		MATERIAL		BEAM	WEIGHT:
DRAWN	LIM		HEAT TREAT		NA	
CHECKED	R. ANDRES		CUSTOMER			
PROG ENG						
SAFETY						
APPROVED	R. ANDRES					
FILENAME	CH-94-AS005					

FINISH: TBD
QUANTITY:
CUSTOMER No:
DESCRIPTION: CH-94 ASSY
DRAWING No.: CH-94-AS005
REV: 0
SCALE: 1:8 | SHEET: 01 | A4

ITEM NO.	PART NUMBER	DESCRIPTION	QTY.
1	CH94-AS001	BOTTOM ASSY	2
2	CH94-AS002	CONNECTOR 2	2
3	TU34-30	LONG TUBE	4
4	CRRD-34	RING	6
5	FRBP	BASE PLATE	2
6	CH-1	BASE TUBE	2
7	MRAT-94	MIRROR	2

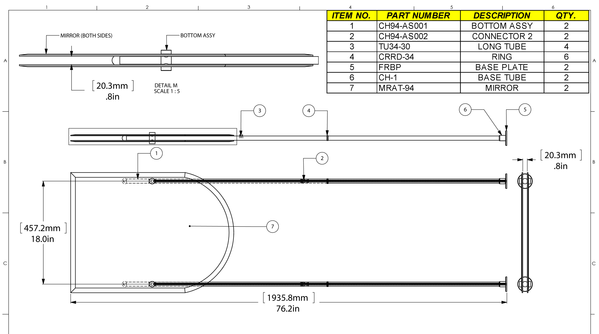

CONFIDENTIALITY/LIMITED LIABILITY STATEMENT
This document (and any files attached to it) is confidential and intended only for the person or entity to which it is delivered. If you are not the intended recipient, then you have received this document by mistake and any use, dissemination, forwarding, printing or copying of the document and/or the attachments is prohibited. Please notify ALLIED GROUNDS immediately either by telephone or by email, delete the mistakenly received document and destroy any copies made of it. We do not accept any liability for any loss or damage which may arise from your receipt of this document.

UNLESS OTHERWISE STATED
DO NOT SCALE DRAWING — X.XXX ±0.005, X.XX ±0.1, X.X ±0.25, X ±0.75
CHAMFER ALL EDGES 0.15x45°
DRAWING ISO — ANGLES X.XX ±0.08°, X.X ±0.5°, X ±0.0°
FIRST ANGLE PROJECTION — MACHINED FINISH 3.2

	INITIALS	DATE	ITEM	QTY	DRG/PART NO	CLIENT:
DESIGNED	LIM		MATERIAL		BEAM	WEIGHT:
DRAWN	LIM		HEAT TREAT		NA	
CHECKED	R. ANDRES		CUSTOMER			
PROG ENG						
SAFETY						
APPROVED	R. ANDRES					
FILENAME	CH-94-AS005					

FINISH: TBD
QUANTITY:
CUSTOMER No:
DESCRIPTION: CH-94 ASSY
DRAWING No.: CH-94-AS005
REV: 0
SCALE: 1:9 | SHEET: 01 | A4