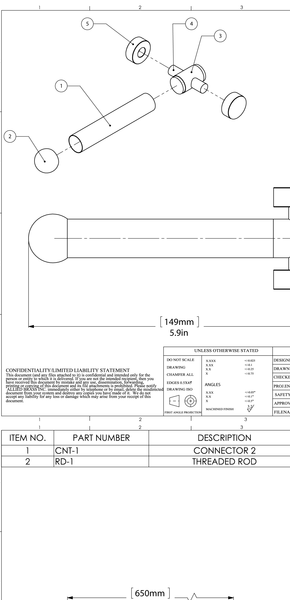

ITEM NO.	PART NUMBER	DESCRIPTION	QTY.
1	TU34-4	BOTTOM TUBE	1
2	BL1T-34	End Ball	1
3	CH-2	CONNECTOR 1	1
4	PIN-1	PIN	1
5	Card-1	END LOCK	2

CONFIDENTIALITY/LIMITED LIABILITY STATEMENT
This document (and any files attached to it) is confidential and intended only for the person or entity to which it is delivered. If you are not the intended recipient, then you have received this document by mistake and you are, disseminating, forwarding, printing or copying of this document and its attachments is prohibited. Please notify ALLIED SPRING INC. immediately either by telephone or by email, delete the emailed/saved copy of this document and its attachments from your system. ALLIED SPRING INC. accept any liability for any loss or damage which may arise from your receipt of this document.

UNLESS OTHERWISE STATED															
DO NOT SCALE DRAWING	X.XXX ±0.005 X.XX ±0.1 X.X ±0.25 X ±0.5				INITIALS	DATE	ITEM	QTY	DRG/PART NO	CLIENT:					
CHAMFER ALL				DESIGNED	LIM	MATERIAL	304A2L	WEIGHT		FINISH	TBD				
EDGES ULTRAP	ANGLES X.X ±0.25° X.X ±0.5° X ±1.0°			DRAWN	LIM	HEAT TREAT	NA			QUANTITY					
DRAWING ISO				CHECKED	R. ANDRES	CUSTOMER				CUSTOMER No					
FIRST ANGLE PROJECTION		MACHINED FINISH		PROG ENG		DESCRIPTION:				DRAWING No.				REV	
				SAFETY		BOTTOM ASSY				CH-93-AS001				0	
				APPROVED	R. ANDRES					SCALE 1:1	SHEET: 01			A4	
				FILENAME	CH-93-AS001										

ITEM NO.	PART NUMBER	DESCRIPTION	QTY.
1	CNT-1	CONNECTOR 2	1
2	RD-1	THREADED ROD	1

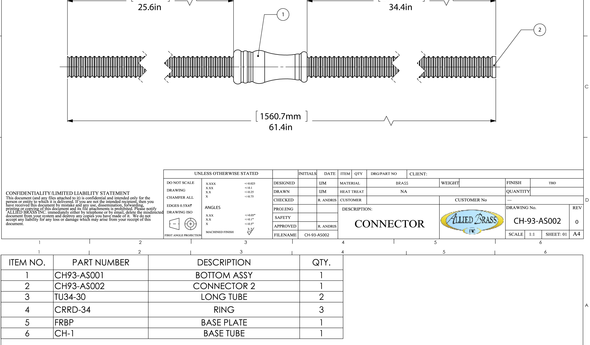

CONFIDENTIALITY/LIMITED LIABILITY STATEMENT
This document (and any files attached to it) is confidential and intended only for the person or entity to which it is delivered. If you are not the intended recipient, then you have received this document by mistake and you are, disseminating, forwarding, printing or copying of this document and its attachments is prohibited. Please notify ALLIED SPRING INC. immediately either by telephone or by email, delete the emailed/saved copy of this document and its attachments from your system. ALLIED SPRING INC. accept any liability for any loss or damage which may arise from your receipt of this document.

UNLESS OTHERWISE STATED															
DO NOT SCALE DRAWING	X.XXX ±0.005 X.XX ±0.1 X.X ±0.25 X ±0.5				INITIALS	DATE	ITEM	QTY	DRG/PART NO	CLIENT:					
CHAMFER ALL				DESIGNED	LIM	MATERIAL	304A2L	WEIGHT		FINISH	TBD				
EDGES ULTRAP	ANGLES X.X ±0.25° X.X ±0.5° X ±1.0°			DRAWN	LIM	HEAT TREAT	NA			QUANTITY					
DRAWING ISO				CHECKED	R. ANDRES	CUSTOMER				CUSTOMER No					
FIRST ANGLE PROJECTION		MACHINED FINISH		PROG ENG		DESCRIPTION:				DRAWING No.				REV	
				SAFETY		CONNECTOR				CH-93-AS002				0	
				APPROVED	R. ANDRES					SCALE 1:1	SHEET: 01			A4	
				FILENAME	CH-93-AS002										

ITEM NO.	PART NUMBER	DESCRIPTION	QTY.
1	CH93-AS001	BOTTOM ASSY	1
2	CH93-AS002	CONNECTOR 2	1
3	TU34-30	LONG TUBE	2
4	CRRD-34	RING	3
5	FRBP	BASE PLATE	1
6	CH-1	BASE TUBE	1

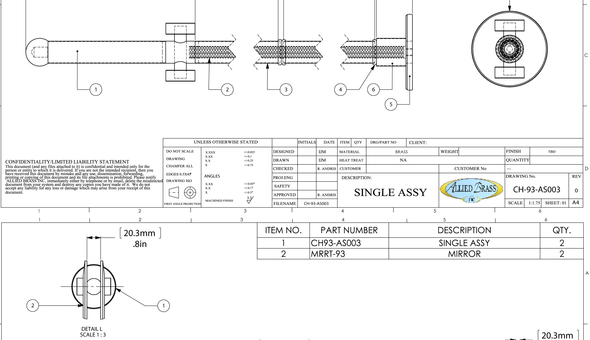

CONFIDENTIALITY/LIMITED LIABILITY STATEMENT
This document (and any files attached to it) is confidential and intended only for the person or entity to which it is delivered. If you are not the intended recipient, then you have received this document by mistake and you are, disseminating, forwarding, printing or copying of this document and its attachments is prohibited. Please notify ALLIED SPRING INC. immediately either by telephone or by email, delete the emailed/saved copy of this document and its attachments from your system. ALLIED SPRING INC. accept any liability for any loss or damage which may arise from your receipt of this document.

UNLESS OTHERWISE STATED															
DO NOT SCALE DRAWING	X.XXX ±0.005 X.XX ±0.1 X.X ±0.25 X ±0.5				INITIALS	DATE	ITEM	QTY	DRG/PART NO	CLIENT:					
CHAMFER ALL				DESIGNED	LIM	MATERIAL	304A2L	WEIGHT		FINISH	TBD				
EDGES ULTRAP	ANGLES X.X ±0.25° X.X ±0.5° X ±1.0°			DRAWN	LIM	HEAT TREAT	NA			QUANTITY					
DRAWING ISO				CHECKED	R. ANDRES	CUSTOMER				CUSTOMER No					
FIRST ANGLE PROJECTION		MACHINED FINISH		PROG ENG		DESCRIPTION:				DRAWING No.				REV	
				SAFETY		SINGLE ASSY				CH-93-AS003				0	
				APPROVED	R. ANDRES					SCALE 1:1.75	SHEET: 01			A4	
				FILENAME	CH-93-AS003										

ITEM NO.	PART NUMBER	DESCRIPTION	QTY.
1	CH93-AS003	SINGLE ASSY	2
2	MRRT-93	MIRROR	2

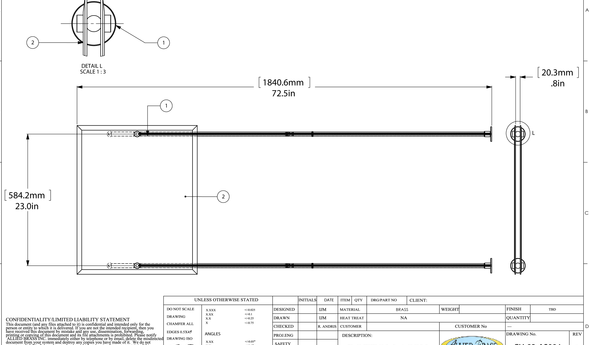

CONFIDENTIALITY/LIMITED LIABILITY STATEMENT
This document (and any files attached to it) is confidential and intended only for the person or entity to which it is delivered. If you are not the intended recipient, then you have received this document by mistake and you are, disseminating, forwarding, printing or copying of this document and its attachments is prohibited. Please notify ALLIED SPRING INC. immediately either by telephone or by email, delete the emailed/saved copy of this document and its attachments from your system. ALLIED SPRING INC. accept any liability for any loss or damage which may arise from your receipt of this document.

UNLESS OTHERWISE STATED															
DO NOT SCALE DRAWING	X.XXX ±0.005 X.XX ±0.1 X.X ±0.25 X ±0.5				INITIALS	DATE	ITEM	QTY	DRG/PART NO	CLIENT:					
CHAMFER ALL				DESIGNED	LIM	MATERIAL	304A2L	WEIGHT		FINISH	TBD				
EDGES ULTRAP	ANGLES X.X ±0.25° X.X ±0.5° X ±1.0°			DRAWN	LIM	HEAT TREAT	NA			QUANTITY					
DRAWING ISO				CHECKED	R. ANDRES	CUSTOMER				CUSTOMER No					
FIRST ANGLE PROJECTION		MACHINED FINISH		PROG ENG		DESCRIPTION:				DRAWING No.				REV	
				SAFETY		BOTTOM ASSY				CH-93-AS004				0	
				APPROVED	R. ANDRES					SCALE 1:8	SHEET: 01			A4	
				FILENAME	CH-93-AS004										

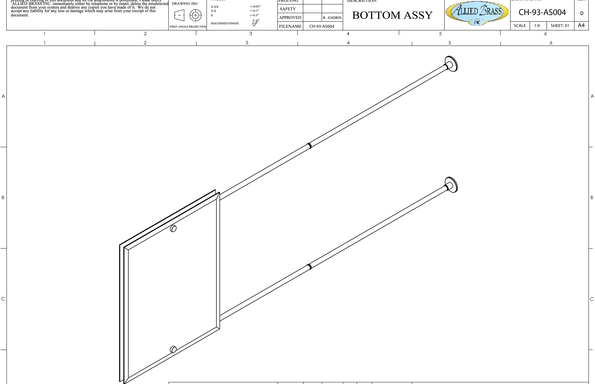

CONFIDENTIALITY/LIMITED LIABILITY STATEMENT
This document (and any files attached to it) is confidential and intended only for the person or entity to which it is delivered. If you are not the intended recipient, then you have received this document by mistake and you are, disseminating, forwarding, printing or copying of this document and its attachments is prohibited. Please notify ALLIED SPRING INC. immediately either by telephone or by email, delete the emailed/saved copy of this document and its attachments from your system. ALLIED SPRING INC. accept any liability for any loss or damage which may arise from your receipt of this document.

UNLESS OTHERWISE STATED															
DO NOT SCALE DRAWING	X.XXX ±0.005 X.XX ±0.1 X.X ±0.25 X ±0.5				INITIALS	DATE	ITEM	QTY	DRG/PART NO	CLIENT:					
CHAMFER ALL				DESIGNED	LIM	MATERIAL	304A2L	WEIGHT		FINISH	TBD				
EDGES ULTRAP	ANGLES X.X ±0.25° X.X ±0.5° X ±1.0°			DRAWN	LIM	HEAT TREAT	NA			QUANTITY					
DRAWING ISO				CHECKED	R. ANDRES	CUSTOMER				CUSTOMER No					
FIRST ANGLE PROJECTION		MACHINED FINISH		PROG ENG		DESCRIPTION:				DRAWING No.				REV	
				SAFETY		CH-93 ASSY				CH-93-AS005				0	
				APPROVED	R. ANDRES					SCALE 1:8	SHEET: 01			A4	
				FILENAME	CH-93-AS005										

ITEM NO.	PART NUMBER	DESCRIPTION	QTY.
1	CH93-AS001	BOTTOM ASSY	2
2	CH93-AS002	CONNECTOR 2	2
3	TU34-30	LONG TUBE	4
4	CRRD-34	RING	6
5	FRBP	BASE PLATE	2
6	CH-1	BASE TUBE	2
7	MRRT-93	MIRROR	2

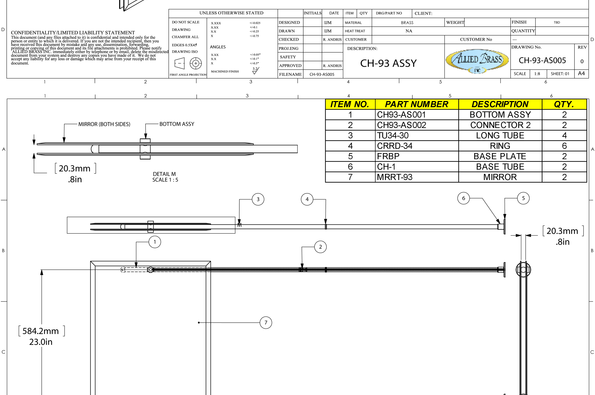

CONFIDENTIALITY/LIMITED LIABILITY STATEMENT
This document (and any files attached to it) is confidential and intended only for the person or entity to which it is delivered. If you are not the intended recipient, then you have received this document by mistake and you are, disseminating, forwarding, printing or copying of this document and its attachments is prohibited. Please notify ALLIED SPRING INC. immediately either by telephone or by email, delete the emailed/saved copy of this document and its attachments from your system. ALLIED SPRING INC. accept any liability for any loss or damage which may arise from your receipt of this document.

UNLESS OTHERWISE STATED															
DO NOT SCALE DRAWING	X.XXX ±0.005 X.XX ±0.1 X.X ±0.25 X ±0.5				INITIALS	DATE	ITEM	QTY	DRG/PART NO	CLIENT:					
CHAMFER ALL				DESIGNED	LIM	MATERIAL	304A2L	WEIGHT		FINISH	TBD				
EDGES ULTRAP	ANGLES X.X ±0.25° X.X ±0.5° X ±1.0°			DRAWN	LIM	HEAT TREAT	NA			QUANTITY					
DRAWING ISO				CHECKED	R. ANDRES	CUSTOMER				CUSTOMER No					
FIRST ANGLE PROJECTION		MACHINED FINISH		PROG ENG		DESCRIPTION:				DRAWING No.				REV	
				SAFETY		CH-93 ASSY				CH-93-AS005				0	
				APPROVED	R. ANDRES					SCALE 1:8	SHEET: 01			A4	
				FILENAME	CH-93-AS005										