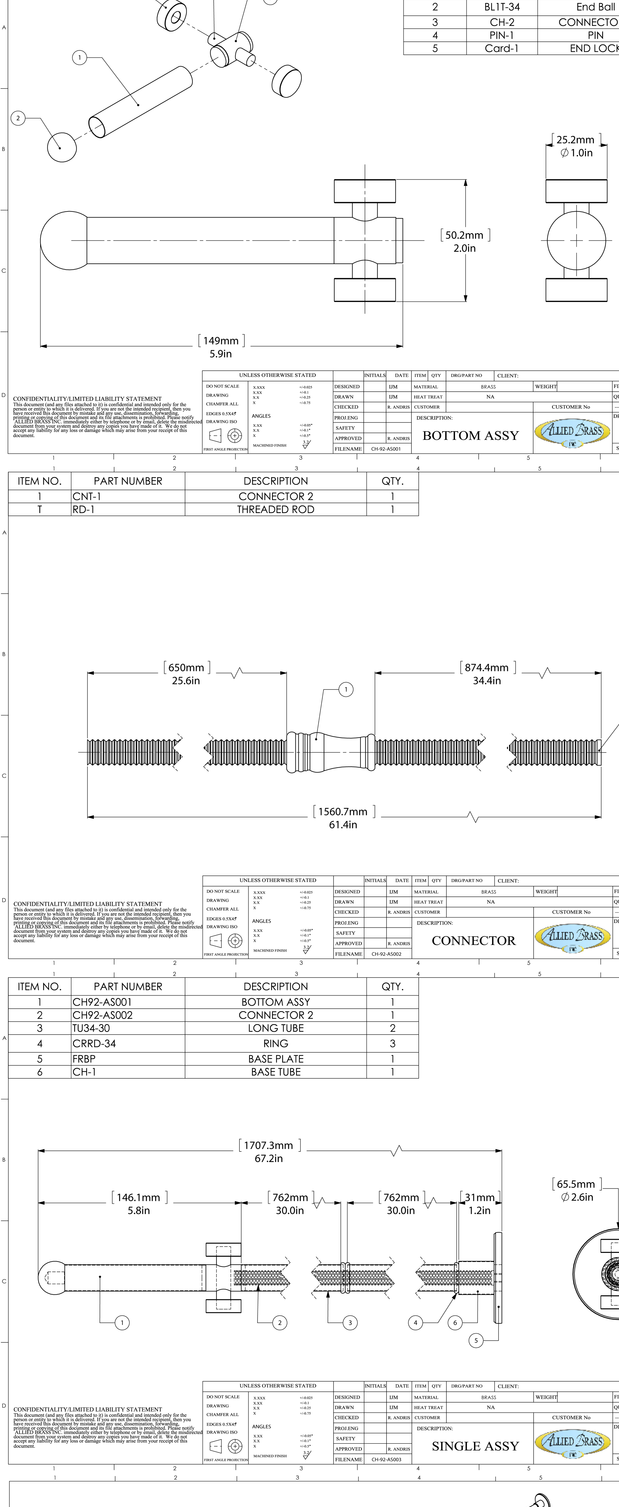

ITEM NO.	PART NUMBER	DESCRIPTION	QTY.
1	TU34-4	BOTTOM TUBE	1
2	BL1T-34	End Ball	1
3	CH-2	CONNECTOR 1	1
4	PIN-1	PIN	1
5	Card-1	END LOCK	2

UNLESS OTHERWISE STATED

DO NOT SCALE DRAWING; CHAMFER ALL; EDGES 0.15x45°; DRAWING ISO; FIRST ANGLE PROJECTION

ANGLES: X.XX ±0.05°, X.X ±0.1°, X ±0.5°

X.XXX ±0.025; X.XX ±0.1; X.X ±0.25; X ±0.75

MACHINED FINISH: 125

	INITIALS	DATE
DESIGNED	LIM	
DRAWN	LIM	
CHECKED	K. ANDRIS	
PROJ ENG		
SAFETY		
APPROVED	K. ANDRIS	
FILENAME	CH-92-AS001	

ITEM	QTY	DRG/PART NO	CLIENT:
MATERIAL	BRASS	WEIGHT	FINISH TBD
HEAT TREAT	NA		QUANTITY
CUSTOMER		CUSTOMER No	—

DESCRIPTION: BOTTOM ASSY

DRAWING No. CH-92-AS001 — REV 0

SCALE 1:1 — SHEET: 01 — A4

CONFIDENTIALITY/LIMITED LIABILITY STATEMENT
This document (and any files attached to it) is confidential and intended only for the person or entity to which it is delivered. If you are not the intended recipient, then you have received this document by mistake and any use, dissemination, forwarding, printing or copying of this document and its attachments is prohibited. Please notify ALLIED BRASS INC. immediately either by telephone or by email, delete the misdelivered document from your system and destroy any copies you have made of it. We do not accept any liability for any loss or damage which may arise from your receipt of this document.

ITEM NO.	PART NUMBER	DESCRIPTION	QTY.
1	CNT-1	CONNECTOR 2	1
T	RD-1	THREADED ROD	1

UNLESS OTHERWISE STATED

DO NOT SCALE DRAWING; CHAMFER ALL; EDGES 0.15x45°; DRAWING ISO; FIRST ANGLE PROJECTION

ANGLES: X.XX ±0.05°, X.X ±0.1°, X ±0.5°

X.XXX ±0.025; X.XX ±0.1; X.X ±0.25; X ±0.75

MACHINED FINISH: 125

	INITIALS	DATE
DESIGNED	LIM	
DRAWN	LIM	
CHECKED	K. ANDRIS	
PROJ ENG		
SAFETY		
APPROVED	K. ANDRIS	
FILENAME	CH-92-AS002	

ITEM	QTY	DRG/PART NO	CLIENT:
MATERIAL	BRASS	WEIGHT	FINISH TBD
HEAT TREAT	NA		QUANTITY
CUSTOMER		CUSTOMER No	—

DESCRIPTION: CONNECTOR

DRAWING No. CH-92-AS002 — REV 0

SCALE 1:1 — SHEET: 01 — A4

CONFIDENTIALITY/LIMITED LIABILITY STATEMENT
This document (and any files attached to it) is confidential and intended only for the person or entity to which it is delivered. If you are not the intended recipient, then you have received this document by mistake and any use, dissemination, forwarding, printing or copying of this document and its attachments is prohibited. Please notify ALLIED BRASS INC. immediately either by telephone or by email, delete the misdelivered document from your system and destroy any copies you have made of it. We do not accept any liability for any loss or damage which may arise from your receipt of this document.

ITEM NO.	PART NUMBER	DESCRIPTION	QTY.
1	CH92-AS001	BOTTOM ASSY	1
2	CH92-AS002	CONNECTOR 2	1
3	TU34-30	LONG TUBE	2
4	CRRD-34	RING	3
5	FRBP	BASE PLATE	1
6	CH-1	BASE TUBE	1

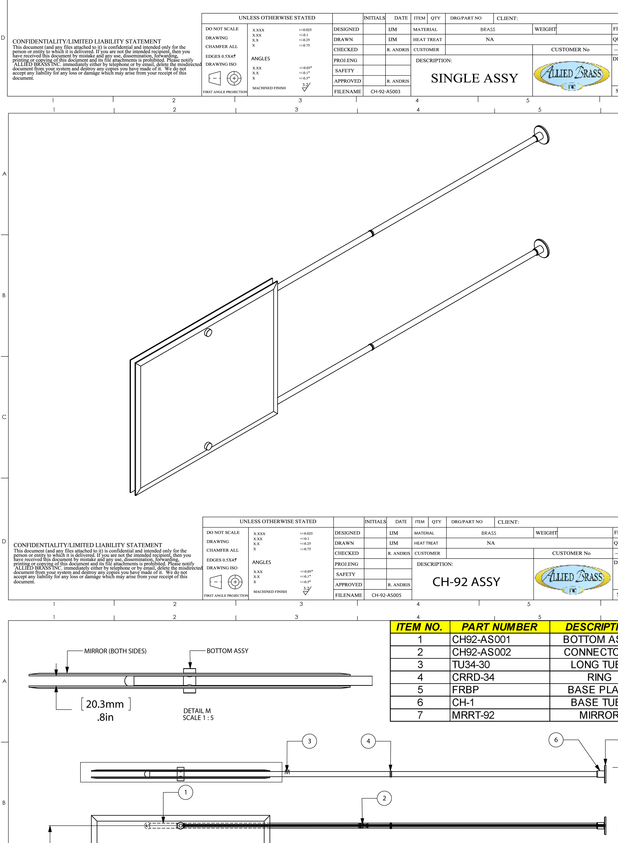

UNLESS OTHERWISE STATED

DO NOT SCALE DRAWING; CHAMFER ALL; EDGES 0.15x45°; DRAWING ISO; FIRST ANGLE PROJECTION

ANGLES: X.XX ±0.05°, X.X ±0.1°, X ±0.5°

X.XXX ±0.025; X.XX ±0.1; X.X ±0.25; X ±0.75

MACHINED FINISH: 125

	INITIALS	DATE
DESIGNED	LIM	
DRAWN	LIM	
CHECKED	K. ANDRIS	
PROJ ENG		
SAFETY		
APPROVED	K. ANDRIS	
FILENAME	CH-92-AS003	

ITEM	QTY	DRG/PART NO	CLIENT:
MATERIAL	BRASS	WEIGHT	FINISH TBD
HEAT TREAT	NA		QUANTITY
CUSTOMER		CUSTOMER No	—

DESCRIPTION: SINGLE ASSY

DRAWING No. CH-92-AS003 — REV 0

SCALE 1:1.75 — SHEET: 01 — A4

CONFIDENTIALITY/LIMITED LIABILITY STATEMENT
This document (and any files attached to it) is confidential and intended only for the person or entity to which it is delivered. If you are not the intended recipient, then you have received this document by mistake and any use, dissemination, forwarding, printing or copying of this document and its attachments is prohibited. Please notify ALLIED BRASS INC. immediately either by telephone or by email, delete the misdelivered document from your system and destroy any copies you have made of it. We do not accept any liability for any loss or damage which may arise from your receipt of this document.

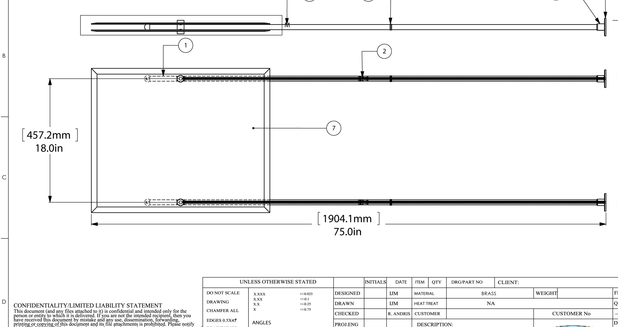

UNLESS OTHERWISE STATED

DO NOT SCALE DRAWING; CHAMFER ALL; EDGES 0.15x45°; DRAWING ISO; FIRST ANGLE PROJECTION

ANGLES: X.XX ±0.05°, X.X ±0.1°, X ±0.5°

X.XXX ±0.025; X.XX ±0.1; X.X ±0.25; X ±0.75

MACHINED FINISH: 125

	INITIALS	DATE
DESIGNED	LIM	
DRAWN	LIM	
CHECKED	K. ANDRIS	
PROJ ENG		
SAFETY		
APPROVED	K. ANDRIS	
FILENAME	CH-92-AS005	

ITEM	QTY	DRG/PART NO	CLIENT:
MATERIAL	BRASS	WEIGHT	FINISH TBD
HEAT TREAT	NA		QUANTITY
CUSTOMER		CUSTOMER No	—

DESCRIPTION: CH-92 ASSY

DRAWING No. CH-92-AS005 — REV 0

SCALE 1:8 — SHEET: 01 — A4

CONFIDENTIALITY/LIMITED LIABILITY STATEMENT
This document (and any files attached to it) is confidential and intended only for the person or entity to which it is delivered. If you are not the intended recipient, then you have received this document by mistake and any use, dissemination, forwarding, printing or copying of this document and its attachments is prohibited. Please notify ALLIED BRASS INC. immediately either by telephone or by email, delete the misdelivered document from your system and destroy any copies you have made of it. We do not accept any liability for any loss or damage which may arise from your receipt of this document.

ITEM NO.	PART NUMBER	DESCRIPTION	QTY.
1	CH92-AS001	BOTTOM ASSY	2
2	CH92-AS002	CONNECTOR 2	2
3	TU34-30	LONG TUBE	4
4	CRRD-34	RING	6
5	FRBP	BASE PLATE	2
6	CH-1	BASE TUBE	2
7	MRRT-92	MIRROR	2

UNLESS OTHERWISE STATED

DO NOT SCALE DRAWING; CHAMFER ALL; EDGES 0.15x45°; DRAWING ISO; FIRST ANGLE PROJECTION

ANGLES: X.XX ±0.05°, X.X ±0.1°, X ±0.5°

X.XXX ±0.025; X.XX ±0.1; X.X ±0.25; X ±0.75

MACHINED FINISH: 125

	INITIALS	DATE
DESIGNED	LIM	
DRAWN	LIM	
CHECKED	K. ANDRIS	
PROJ ENG		
SAFETY		
APPROVED	K. ANDRIS	
FILENAME	CH-92-AS005	

ITEM	QTY	DRG/PART NO	CLIENT:
MATERIAL	BRASS	WEIGHT	FINISH TBD
HEAT TREAT	NA		QUANTITY
CUSTOMER		CUSTOMER No	—

DESCRIPTION: CH-92 ASSY

DRAWING No. CH-92-AS005 — REV 0

SCALE 1:9 — SHEET: 01 — A4

CONFIDENTIALITY/LIMITED LIABILITY STATEMENT
This document (and any files attached to it) is confidential and intended only for the person or entity to which it is delivered. If you are not the intended recipient, then you have received this document by mistake and any use, dissemination, forwarding, printing or copying of this document and its attachments is prohibited. Please notify ALLIED BRASS INC. immediately either by telephone or by email, delete the misdelivered document from your system and destroy any copies you have made of it. We do not accept any liability for any loss or damage which may arise from your receipt of this document.