ITEM NO.	PART NUMBER	DESCRIPTION	QTY.
1	TU34-4	BOTTOM TUBE	1
2	BL1T-34	End Ball	1
3	CH-2	CONNECTOR 1	1
4	PIN-1	PIN	1
5	Card-1	END LOCK	2

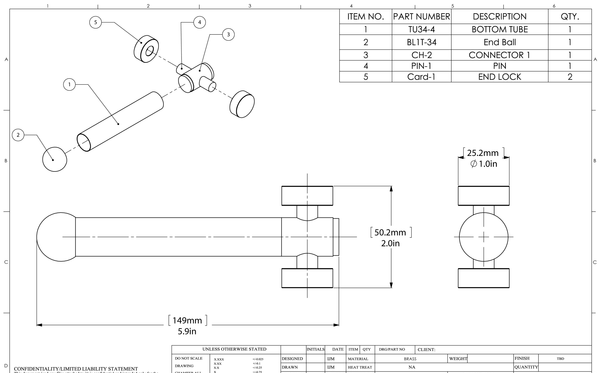

CONFIDENTIALITY/LIMITED LIABILITY STATEMENT
This document (and any files attached to it) is confidential and intended only for the person or entity to which it is addressed. If you are not the intended recipient, then you must not disclose, copy or take any action in reliance on this document. Plastic Surgery reserves ownership of this document and its file attachments is prohibited. Plastic surgery has taken all reasonable precautions to ensure no viruses are present in this document or any document from your system and delivery are capped you have bands of it. We do not accept any liability for any loss or damage which may arise from your receipt of this document.

UNLESS OTHERWISE STATED
DO NOT SCALE DRAWING
CHAMFER ALL
FINISH ±0.05
ANGLES
DRAWING ISO
X.XX ±0.010
X.X ±0.05
X ±0.25
±0.25°
±0.5°
±1°
MACHINED FINISH 3.2
FIRST ANGLE PROJECTION

	INITIALS	DATE	ITEM	QTY	DRG/PART NO	CLIENT:
DESIGNED						
DRAWN						
CHECKED						
PROLING						
SAFETY						
APPROVED						
FILENAME						