Suggested Hole Drillings for Ella Acrylic Soaking BathTubs - 5 Piece Faucet Set

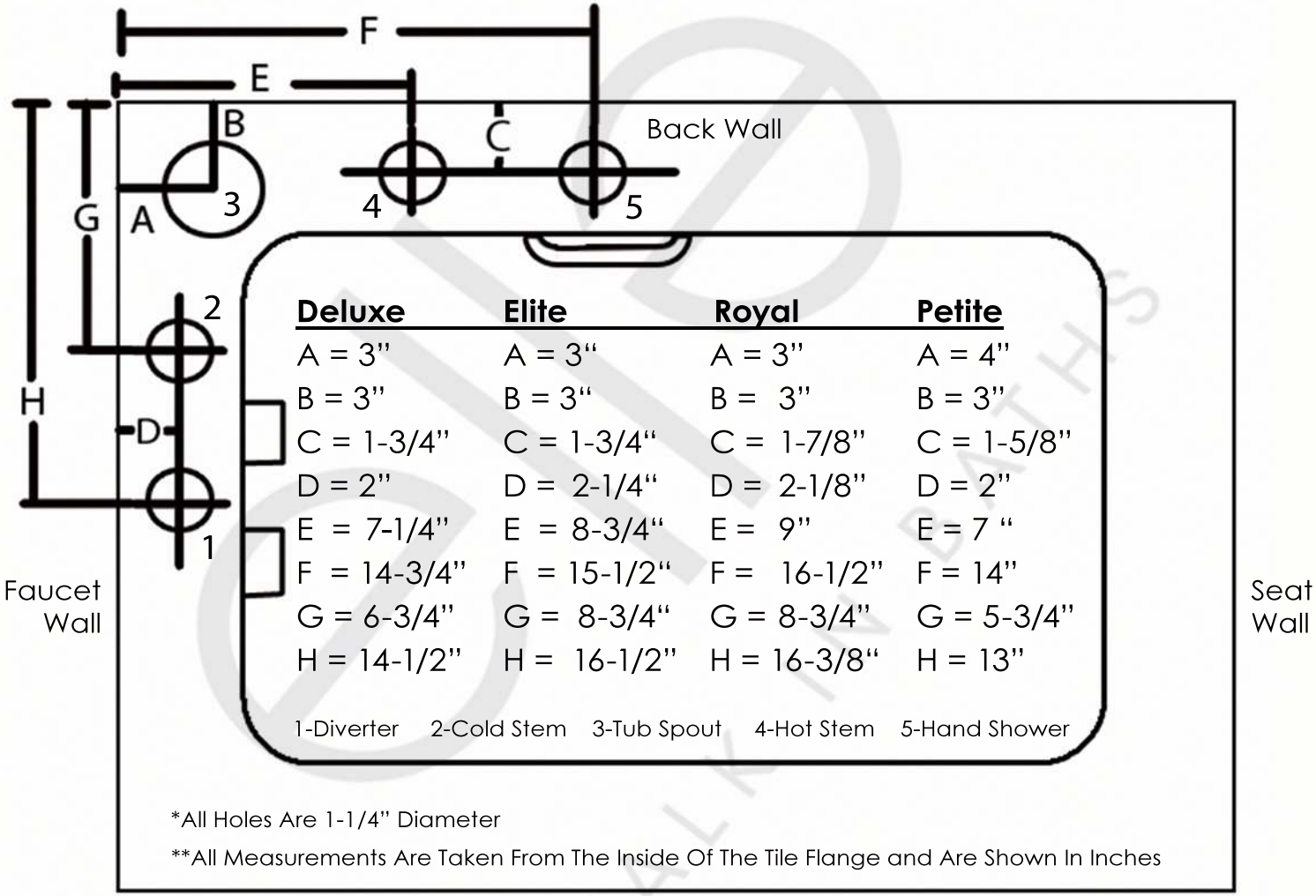

Deluxe	Elite	Royal	Petite
A = 3"	A = 3"	A = 3"	A = 4"
B = 3"	B = 3"	B = 3"	B = 3"
C = 1-3/4"	C = 1-3/4"	C = 1-7/8"	C = 1-5/8"
D = 2"	D = 2-1/4"	D = 2-1/8"	D = 2"
E = 7-1/4"	E = 8-3/4"	E = 9"	E = 7 "
F = 14-3/4"	F = 15-1/2"	F = 16-1/2"	F = 14"
G = 6-3/4"	G = 8-3/4"	G = 8-3/4"	G = 5-3/4"
H = 14-1/2"	H = 16-1/2"	H = 16-3/8"	H = 13"

1-Diverter 2-Cold Stem 3-Tub Spout 4-Hot Stem 5-Hand Shower

*All Holes Are 1-1/4" Diameter

**All Measurements Are Taken From The Inside Of The Tile Flange and Are Shown In Inches

www.ellasbubbles.com 1 800 480 6850