68” NISHI FREESTANDING RESIN TUB

Cat. No.
RTOVN68

BARCLAY

L: 68”
W: 29”
H: 24”

Water depth: 15-3/4” to overflow

The following is recommended for RTOVN68 soaking tubs:
- Faucets: part **#7082 or 7088**
- Freestanding Bath Supplies**: #4502**
- Freestanding Filler**: #7901, 7922, or 7952**

(Do Not Need Bath Supplies)

Gallon Capacity:	60
Shipping Weight:	490 lbs.
Empty Weight:	380 lbs.
Filled Weight:	881 lbs.

Features:

- ►Poly-resin blend is the same color throughout
- ►Exterior has easy care matte finish
- ►Rim is 1” thick
- ►No faucet holes
- ►Has overflow slot with built-in drain channel
- ►White drain included
- ►Tub is thoroughly inspected before shipment
- ►Includes built-in adjusters

Tub Colors:
WH White

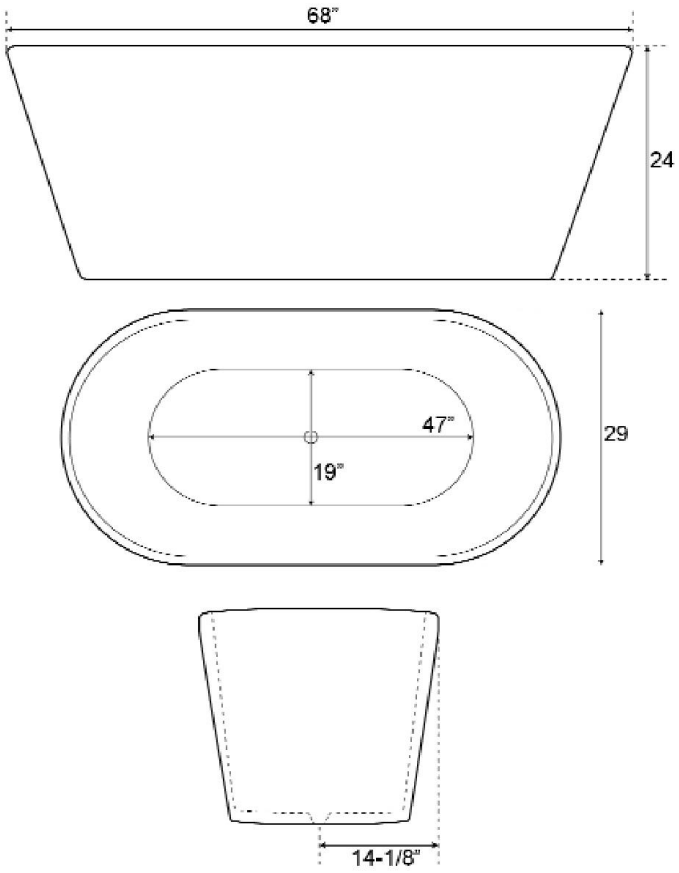

Dimensions of fixture are nominal and specifications subject to change without notice.