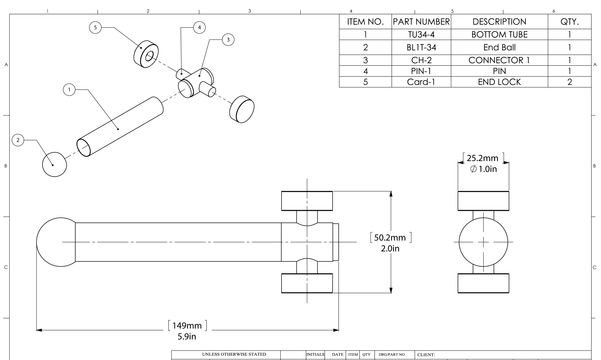

ITEM NO.	PART NUMBER	DESCRIPTION	QTY.
1	TU34-4	BOTTOM TUBE	1
2	BLIT-34	End Bolt	1
3	CH-2	CONNECTOR 1	1
4	PIN-1	PIN	1
5	Card-1	END LOCK	2

CONFIDENTIALITY/LIMITED LIABILITY STATEMENT
This document (and any files attached to it) is confidential and intended only for the person or entity to which it is delivered. If you are not the intended recipient, then you have received this document by mistake and any use, dissemination, forwarding, printing or copying of the document and/or the attachments is prohibited. Please notify ALLIED BRASS INC. immediately either by telephone or by email, delete the mistakenly received document from your system and destroy any copies you have made of it. We do not accept any liability for any loss or damage which may arise from your receipt of this document.

UNLESS OTHERWISE STATED
DO NOT SCALE DRAWING
CHAMFER ALL EDGES 0.15x45°
DRAWING ISO
FIRST ANGLE PROJECTION
X.XXX ±0.005
X.XX ±0.01
X.X ±0.10
X ±0.75
ANGLES X.XX ±0.08°
X.X ±0.5°
X ±0.0°
MACHINED FINISH 125

	INITIALS	DATE	ITEM	QTY	DRG/PART NO	CLIENT:
DESIGNED	LIM		MATERIAL		304 SS	WEIGHT:
DRAWN	LIM		HEAT TREAT		NA	
CHECKED	K. ANDRS		CUSTOMER			
PROG ENG			DESCRIPTION:			
SAFETY						
APPROVED	K. ANDRS					
FILENAME	CH-94-AS001					

FINISH: TBD
QUANTITY:
CUSTOMER No:
DRAWING No: CH-94-AS001
REV: 0
SCALE: 1:1 SHEET: 01 A4

BOTTOM ASSY

ALLIED BRASS INC

ITEM NO.	PART NUMBER	DESCRIPTION	QTY.
1	CNT-1	CONNECTOR 2	1
T	RD-1	THREADED ROD	1

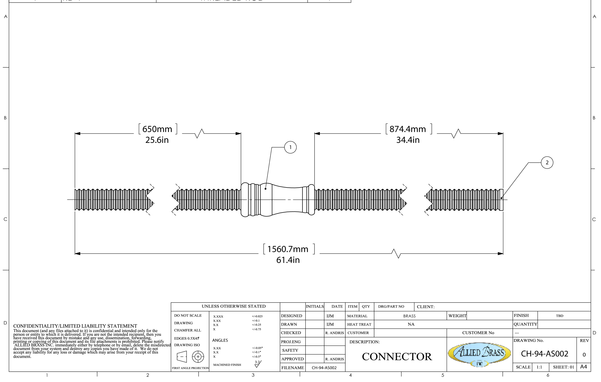

CONFIDENTIALITY/LIMITED LIABILITY STATEMENT
This document (and any files attached to it) is confidential and intended only for the person or entity to which it is delivered. If you are not the intended recipient, then you have received this document by mistake and any use, dissemination, forwarding, printing or copying of the document and/or the attachments is prohibited. Please notify ALLIED BRASS INC. immediately either by telephone or by email, delete the mistakenly received document from your system and destroy any copies you have made of it. We do not accept any liability for any loss or damage which may arise from your receipt of this document.

UNLESS OTHERWISE STATED
DO NOT SCALE DRAWING
CHAMFER ALL EDGES 0.15x45°
DRAWING ISO
FIRST ANGLE PROJECTION
X.XXX ±0.005
X.XX ±0.01
X.X ±0.10
X ±0.75
ANGLES X.XX ±0.08°
X.X ±0.5°
X ±0.0°
MACHINED FINISH 125

	INITIALS	DATE	ITEM	QTY	DRG/PART NO	CLIENT:
DESIGNED	LIM		MATERIAL		304 SS	WEIGHT:
DRAWN	LIM		HEAT TREAT		NA	
CHECKED	K. ANDRS		CUSTOMER			
PROG ENG			DESCRIPTION:			
SAFETY						
APPROVED	K. ANDRS					
FILENAME	CH-94-AS002					

FINISH: TBD
QUANTITY:
CUSTOMER No:
DRAWING No: CH-94-AS002
REV: 0
SCALE: 1:1 SHEET: 01 A4

CONNECTOR

ALLIED BRASS INC

ITEM NO.	PART NUMBER	DESCRIPTION	QTY.
1	CH94-AS001	BOTTOM ASSY	1
2	CH94-AS002	CONNECTOR 2	1
3	TU34-30	LONG TUBE	2
4	CRRD-34	RING	3
5	FRBP	BASE PLATE	1
6	CH-1	BASE TUBE	1

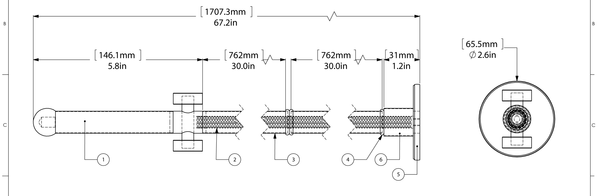

CONFIDENTIALITY/LIMITED LIABILITY STATEMENT
This document (and any files attached to it) is confidential and intended only for the person or entity to which it is delivered. If you are not the intended recipient, then you have received this document by mistake and any use, dissemination, forwarding, printing or copying of the document and/or the attachments is prohibited. Please notify ALLIED BRASS INC. immediately either by telephone or by email, delete the mistakenly received document from your system and destroy any copies you have made of it. We do not accept any liability for any loss or damage which may arise from your receipt of this document.

UNLESS OTHERWISE STATED
DO NOT SCALE DRAWING
CHAMFER ALL EDGES 0.15x45°
DRAWING ISO
FIRST ANGLE PROJECTION
X.XXX ±0.005
X.XX ±0.01
X.X ±0.10
X ±0.75
ANGLES X.XX ±0.08°
X.X ±0.5°
X ±0.0°
MACHINED FINISH 125

	INITIALS	DATE	ITEM	QTY	DRG/PART NO	CLIENT:
DESIGNED	LIM		MATERIAL		304 SS	WEIGHT:
DRAWN	LIM		HEAT TREAT		NA	
CHECKED	K. ANDRS		CUSTOMER			
PROG ENG			DESCRIPTION:			
SAFETY						
APPROVED	K. ANDRS					
FILENAME	CH-94-AS003					

FINISH: TBD
QUANTITY:
CUSTOMER No:
DRAWING No: CH-94-AS003
REV: 0
SCALE: 1:1.75 SHEET: 01 A4

SINGLE ASSY

ALLIED BRASS INC

ITEM NO.	PART NUMBER	DESCRIPTION	QTY.
1	CH94-AS003	SINGLE ASSY	2
2	MRAT-94	MIRROR	2

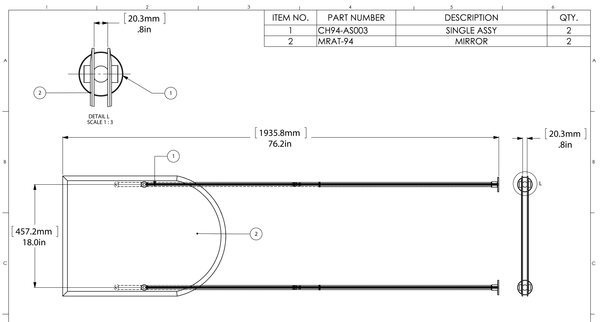

CONFIDENTIALITY/LIMITED LIABILITY STATEMENT
This document (and any files attached to it) is confidential and intended only for the person or entity to which it is delivered. If you are not the intended recipient, then you have received this document by mistake and any use, dissemination, forwarding, printing or copying of the document and/or the attachments is prohibited. Please notify ALLIED BRASS INC. immediately either by telephone or by email, delete the mistakenly received document from your system and destroy any copies you have made of it. We do not accept any liability for any loss or damage which may arise from your receipt of this document.

UNLESS OTHERWISE STATED
DO NOT SCALE DRAWING
CHAMFER ALL EDGES 0.15x45°
DRAWING ISO
FIRST ANGLE PROJECTION
X.XXX ±0.005
X.XX ±0.01
X.X ±0.10
X ±0.75
ANGLES X.XX ±0.08°
X.X ±0.5°
X ±0.0°
MACHINED FINISH 125

	INITIALS	DATE	ITEM	QTY	DRG/PART NO	CLIENT:
DESIGNED	LIM		MATERIAL		304 SS	WEIGHT:
DRAWN	LIM		HEAT TREAT		NA	
CHECKED	K. ANDRS		CUSTOMER			
PROG ENG			DESCRIPTION:			
SAFETY						
APPROVED	K. ANDRS					
FILENAME	CH-94-AS004					

FINISH: TBD
QUANTITY:
CUSTOMER No:
DRAWING No: CH-94-AS004
REV: 0
SCALE: 1:9 SHEET: 01 A4

BOTTOM ASSY

ALLIED BRASS INC

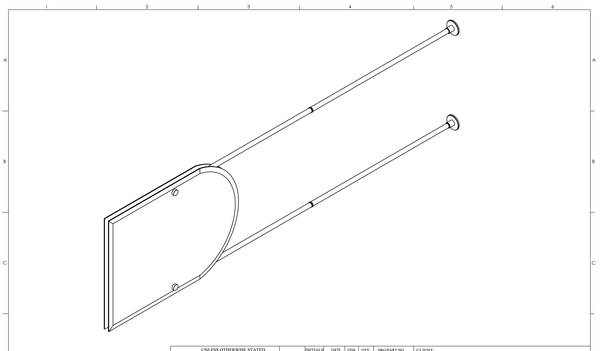

CONFIDENTIALITY/LIMITED LIABILITY STATEMENT
This document (and any files attached to it) is confidential and intended only for the person or entity to which it is delivered. If you are not the intended recipient, then you have received this document by mistake and any use, dissemination, forwarding, printing or copying of the document and/or the attachments is prohibited. Please notify ALLIED BRASS INC. immediately either by telephone or by email, delete the mistakenly received document from your system and destroy any copies you have made of it. We do not accept any liability for any loss or damage which may arise from your receipt of this document.

UNLESS OTHERWISE STATED
DO NOT SCALE DRAWING
CHAMFER ALL EDGES 0.15x45°
DRAWING ISO
FIRST ANGLE PROJECTION
X.XXX ±0.005
X.XX ±0.01
X.X ±0.10
X ±0.75
ANGLES X.XX ±0.08°
X.X ±0.5°
X ±0.0°
MACHINED FINISH 125

	INITIALS	DATE	ITEM	QTY	DRG/PART NO	CLIENT:
DESIGNED	LIM		MATERIAL		304 SS	WEIGHT:
DRAWN	LIM		HEAT TREAT		NA	
CHECKED	K. ANDRS		CUSTOMER			
PROG ENG			DESCRIPTION:			
SAFETY						
APPROVED	K. ANDRS					
FILENAME	CH-94-AS005					

FINISH: TBD
QUANTITY:
CUSTOMER No:
DRAWING No: CH-94-AS005
REV: 0
SCALE: 1:9 SHEET: 01 A4

CH-94 ASSY

ALLIED BRASS INC

ITEM NO.	PART NUMBER	DESCRIPTION	QTY.
1	CH94-AS001	BOTTOM ASSY	2
2	CH94-AS002	CONNECTOR 2	2
3	TU34-30	LONG TUBE	4
4	CRRD-34	RING	6
5	FRBP	BASE PLATE	2
6	CH-1	BASE TUBE	2
7	MRAT-94	MIRROR	2

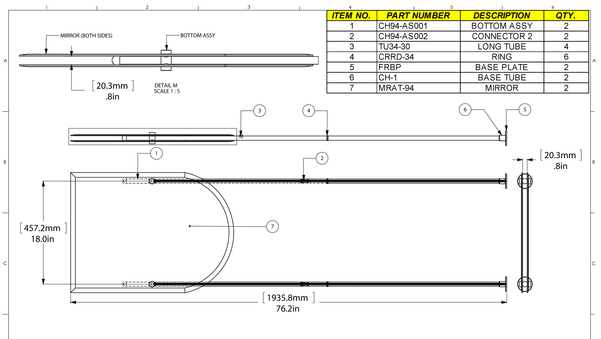

CONFIDENTIALITY/LIMITED LIABILITY STATEMENT
This document (and any files attached to it) is confidential and intended only for the person or entity to which it is delivered. If you are not the intended recipient, then you have received this document by mistake and any use, dissemination, forwarding, printing or copying of the document and/or the attachments is prohibited. Please notify ALLIED BRASS INC. immediately either by telephone or by email, delete the mistakenly received document from your system and destroy any copies you have made of it. We do not accept any liability for any loss or damage which may arise from your receipt of this document.

UNLESS OTHERWISE STATED
DO NOT SCALE DRAWING
CHAMFER ALL EDGES 0.15x45°
DRAWING ISO
FIRST ANGLE PROJECTION
X.XXX ±0.005
X.XX ±0.01
X.X ±0.10
X ±0.75
ANGLES X.XX ±0.08°
X.X ±0.5°
X ±0.0°
MACHINED FINISH 125

	INITIALS	DATE	ITEM	QTY	DRG/PART NO	CLIENT:
DESIGNED	LIM		MATERIAL		304 SS	WEIGHT:
DRAWN	LIM		HEAT TREAT		NA	
CHECKED	K. ANDRS		CUSTOMER			
PROG ENG			DESCRIPTION:			
SAFETY						
APPROVED	K. ANDRS					
FILENAME	CH-94-AS005					

FINISH: TBD
QUANTITY:
CUSTOMER No:
DRAWING No: CH-94-AS005
REV: 0
SCALE: 1:9 SHEET: 01 A4

CH-94 ASSY

ALLIED BRASS INC