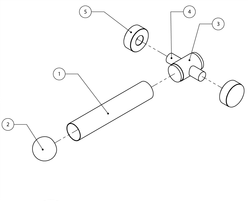

ITEM NO.	PART NUMBER	DESCRIPTION	QTY.
1	TU34-4	BOTTOM TUBE	1
2	BL1T-34	End Ball	1
3	CH-2	CONNECTOR 1	1
4	PIN-1	PIN	1
5	Card-1	END LOCK	2

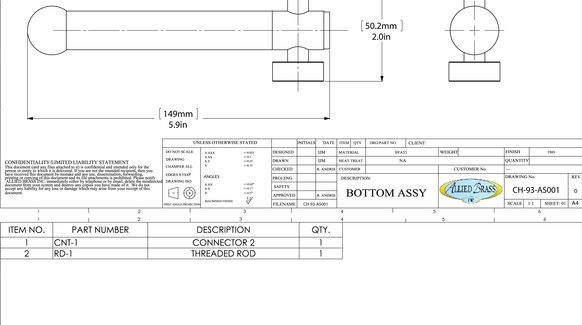

CONFIDENTIALITY/LIMITED LIABILITY STATEMENT
This document (and any files attached to it) is confidential and intended only for the person or entity to which it is delivered. If you are not the intended recipient, then you have received this document by mistake and you are, disseminating, forwarding, printing or copying of this document and its attachments is prohibited. Please notify ALLIED SPRING INC. immediately either by telephone or by email, delete the emailed message and destroy any printed copies of the document. ALLIED SPRING INC. accept any liability for any loss or damage which may arise from your receipt of this document.

UNLESS OTHERWISE STATED
DO NOT SCALE DRAWING; CHAMFER ALL EDGES 0.15xP; DRAWING ISO; FIRST ANGLE PROJECTION
X AXIS +/-0.025; X AXIS +/-0.1; X.X +/-0.25; X.XX +/-0.75; ANGLES +/-0.5°; X +/-0.5°; MACHINED FINISH

	INITIALS	DATE	ITEM	QTY	DRG/PART NO	CLIENT:
DESIGNED	EIM		MATERIAL		304A2	WEIGHT:
DRAWN	EIM		HEAT TREAT		NA	
CHECKED	R. ANDRES		CUSTOMER			
PROGENG			DESCRIPTION:			
SAFETY						
APPROVED	R. ANDRES		BOTTOM ASSY			
FILENAME	CH-93-AS001					

FINISH: TBD; QUANTITY; CUSTOMER No; DRAWING No: CH-93-AS001; REV: 0; SCALE: 1:1; SHEET: 01; A4

ITEM NO.	PART NUMBER	DESCRIPTION	QTY.
1	CNT-1	CONNECTOR 2	1
2	RD-1	THREADED ROD	1

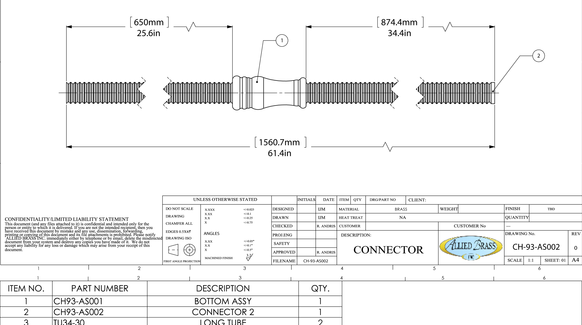

CONFIDENTIALITY/LIMITED LIABILITY STATEMENT
This document (and any files attached to it) is confidential and intended only for the person or entity to which it is delivered. If you are not the intended recipient, then you have received this document by mistake and you are, disseminating, forwarding, printing or copying of this document and its attachments is prohibited. Please notify ALLIED SPRING INC. immediately either by telephone or by email, delete the emailed message and destroy any printed copies of the document. ALLIED SPRING INC. accept any liability for any loss or damage which may arise from your receipt of this document.

UNLESS OTHERWISE STATED
DO NOT SCALE DRAWING; CHAMFER ALL EDGES 0.15xP; DRAWING ISO; FIRST ANGLE PROJECTION
X AXIS +/-0.025; X AXIS +/-0.1; X.X +/-0.25; X.XX +/-0.75; ANGLES +/-0.5°; X +/-0.5°; MACHINED FINISH

	INITIALS	DATE	ITEM	QTY	DRG/PART NO	CLIENT:
DESIGNED	EIM		MATERIAL		304A2	WEIGHT:
DRAWN	EIM		HEAT TREAT		NA	
CHECKED	R. ANDRES		CUSTOMER			
PROGENG			DESCRIPTION:			
SAFETY						
APPROVED	R. ANDRES		CONNECTOR			
FILENAME	CH-93-AS002					

FINISH: TBD; QUANTITY; CUSTOMER No; DRAWING No: CH-93-AS002; REV: 0; SCALE: 1:1; SHEET: 01; A4

ITEM NO.	PART NUMBER	DESCRIPTION	QTY.
1	CH93-AS001	BOTTOM ASSY	1
2	CH93-AS002	CONNECTOR 2	1
3	TU34-30	LONG TUBE	2
4	CRRD-34	RING	3
5	FRBP	BASE PLATE	1
6	CH-1	BASE TUBE	1

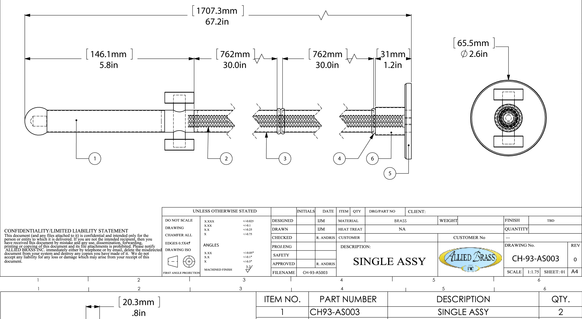

CONFIDENTIALITY/LIMITED LIABILITY STATEMENT
This document (and any files attached to it) is confidential and intended only for the person or entity to which it is delivered. If you are not the intended recipient, then you have received this document by mistake and you are, disseminating, forwarding, printing or copying of this document and its attachments is prohibited. Please notify ALLIED SPRING INC. immediately either by telephone or by email, delete the emailed message and destroy any printed copies of the document. ALLIED SPRING INC. accept any liability for any loss or damage which may arise from your receipt of this document.

UNLESS OTHERWISE STATED
DO NOT SCALE DRAWING; CHAMFER ALL EDGES 0.15xP; DRAWING ISO; FIRST ANGLE PROJECTION
X AXIS +/-0.025; X AXIS +/-0.1; X.X +/-0.25; X.XX +/-0.75; ANGLES +/-0.5°; X +/-0.5°; MACHINED FINISH

	INITIALS	DATE	ITEM	QTY	DRG/PART NO	CLIENT:
DESIGNED	EIM		MATERIAL		304A2	WEIGHT:
DRAWN	EIM		HEAT TREAT		NA	
CHECKED	R. ANDRES		CUSTOMER			
PROGENG			DESCRIPTION:			
SAFETY						
APPROVED	R. ANDRES		SINGLE ASSY			
FILENAME	CH-93-AS003					

FINISH: TBD; QUANTITY; CUSTOMER No; DRAWING No: CH-93-AS003; REV: 0; SCALE: 1:1.75; SHEET: 01; A4

ITEM NO.	PART NUMBER	DESCRIPTION	QTY.
1	CH93-AS003	SINGLE ASSY	2
2	MRRT-93	MIRROR	2

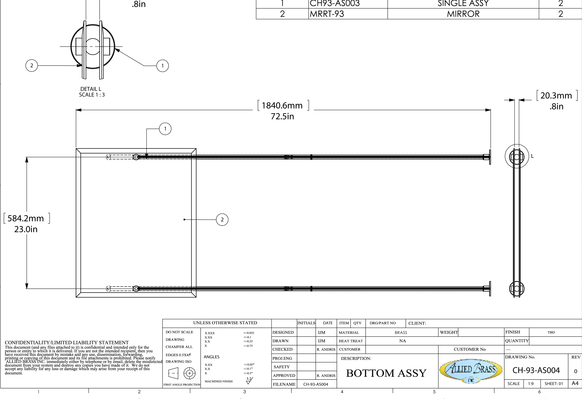

CONFIDENTIALITY/LIMITED LIABILITY STATEMENT
This document (and any files attached to it) is confidential and intended only for the person or entity to which it is delivered. If you are not the intended recipient, then you have received this document by mistake and you are, disseminating, forwarding, printing or copying of this document and its attachments is prohibited. Please notify ALLIED SPRING INC. immediately either by telephone or by email, delete the emailed message and destroy any printed copies of the document. ALLIED SPRING INC. accept any liability for any loss or damage which may arise from your receipt of this document.

UNLESS OTHERWISE STATED
DO NOT SCALE DRAWING; CHAMFER ALL EDGES 0.15xP; DRAWING ISO; FIRST ANGLE PROJECTION
X AXIS +/-0.025; X AXIS +/-0.1; X.X +/-0.25; X.XX +/-0.75; ANGLES +/-0.5°; X +/-0.5°; MACHINED FINISH

	INITIALS	DATE	ITEM	QTY	DRG/PART NO	CLIENT:
DESIGNED	EIM		MATERIAL		304A2	WEIGHT:
DRAWN	EIM		HEAT TREAT		NA	
CHECKED	R. ANDRES		CUSTOMER			
PROGENG			DESCRIPTION:			
SAFETY						
APPROVED	R. ANDRES		BOTTOM ASSY			
FILENAME	CH-93-AS004					

FINISH: TBD; QUANTITY; CUSTOMER No; DRAWING No: CH-93-AS004; REV: 0; SCALE: 1:8; SHEET: 01; A4

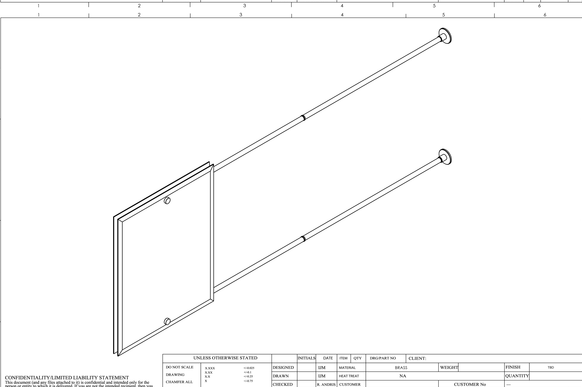

CONFIDENTIALITY/LIMITED LIABILITY STATEMENT
This document (and any files attached to it) is confidential and intended only for the person or entity to which it is delivered. If you are not the intended recipient, then you have received this document by mistake and you are, disseminating, forwarding, printing or copying of this document and its attachments is prohibited. Please notify ALLIED SPRING INC. immediately either by telephone or by email, delete the emailed message and destroy any printed copies of the document. ALLIED SPRING INC. accept any liability for any loss or damage which may arise from your receipt of this document.

UNLESS OTHERWISE STATED
DO NOT SCALE DRAWING; CHAMFER ALL EDGES 0.15xP; DRAWING ISO; FIRST ANGLE PROJECTION
X AXIS +/-0.025; X AXIS +/-0.1; X.X +/-0.25; X.XX +/-0.75; ANGLES +/-0.5°; X +/-0.5°; MACHINED FINISH

	INITIALS	DATE	ITEM	QTY	DRG/PART NO	CLIENT:
DESIGNED	EIM		MATERIAL		304A2	WEIGHT:
DRAWN	EIM		HEAT TREAT		NA	
CHECKED	R. ANDRES		CUSTOMER			
PROGENG			DESCRIPTION:			
SAFETY						
APPROVED	R. ANDRES		CH-93 ASSY			
FILENAME	CH-93-AS005					

FINISH: TBD; QUANTITY; CUSTOMER No; DRAWING No: CH-93-AS005; REV: 0; SCALE: 1:8; SHEET: 01; A4

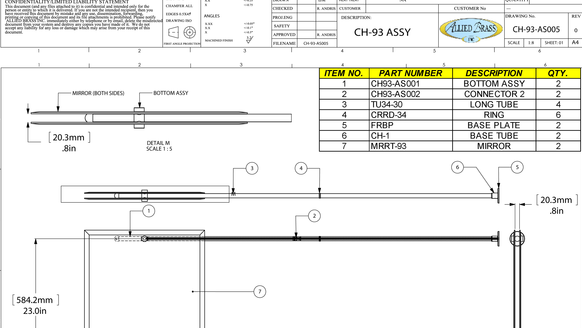

ITEM NO.	PART NUMBER	DESCRIPTION	QTY.
1	CH93-AS001	BOTTOM ASSY	2
2	CH93-AS002	CONNECTOR 2	2
3	TU34-30	LONG TUBE	4
4	CRRD-34	RING	6
5	FRBP	BASE PLATE	2
6	CH-1	BASE TUBE	2
7	MRRT-93	MIRROR	2

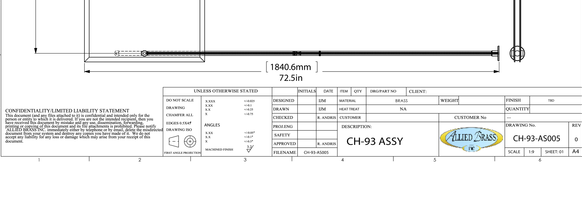

CONFIDENTIALITY/LIMITED LIABILITY STATEMENT
This document (and any files attached to it) is confidential and intended only for the person or entity to which it is delivered. If you are not the intended recipient, then you have received this document by mistake and you are, disseminating, forwarding, printing or copying of this document and its attachments is prohibited. Please notify ALLIED SPRING INC. immediately either by telephone or by email, delete the emailed message and destroy any printed copies of the document. ALLIED SPRING INC. accept any liability for any loss or damage which may arise from your receipt of this document.

UNLESS OTHERWISE STATED
DO NOT SCALE DRAWING; CHAMFER ALL EDGES 0.15xP; DRAWING ISO; FIRST ANGLE PROJECTION
X AXIS +/-0.025; X AXIS +/-0.1; X.X +/-0.25; X.XX +/-0.75; ANGLES +/-0.5°; X +/-0.5°; MACHINED FINISH

	INITIALS	DATE	ITEM	QTY	DRG/PART NO	CLIENT:
DESIGNED	EIM		MATERIAL		304A2	WEIGHT:
DRAWN	EIM		HEAT TREAT		NA	
CHECKED	R. ANDRES		CUSTOMER			
PROGENG			DESCRIPTION:			
SAFETY						
APPROVED	R. ANDRES		CH-93 ASSY			
FILENAME	CH-93-AS005					

FINISH: TBD; QUANTITY; CUSTOMER No; DRAWING No: CH-93-AS005; REV: 0; SCALE: 1:8; SHEET: 01; A4