Model 120348LF

Charlestown™

Single Lever Handle Bar Faucet
PVD Brushed Nickel Finish
Includes Optional Deck Plate
1/2" IPS Connections

Refer to Premier Faucet Parts List Sheet for Part Numbers and Ordering Information.

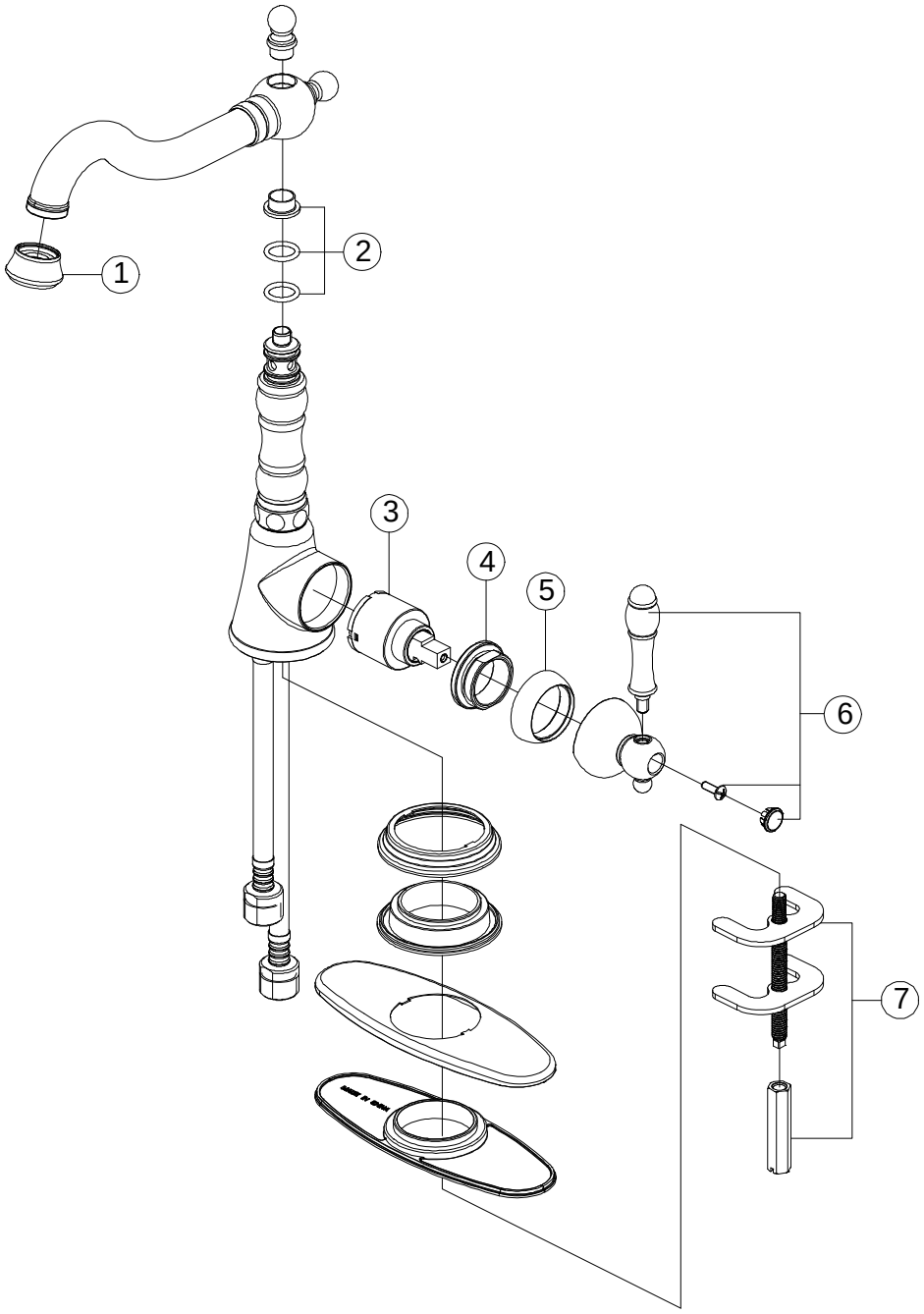

For additional information, contact Premier Faucet at 866-745-4010 or visit our website at www.premierfaucet.com

Specifications are subject to change.
© 2014 Interline Brands, Inc.

Model 120348LF

Charlestown™

Single Lever Handle Bar Faucet
PVD Brushed Nickel Finish
Includes Optional Deck Plate
1/2" IPS Connections

Refer to Premier Faucet Parts Schematic Sheet for Parts Diagram.

INDEX	DESCRIPTION	MATERIAL	QTY	PART #
1	AERATOR	BRASS	1	994682
2	WASHER KIT	BUNA-N	1	1030690
3	CERAMIC CARTRIDGE	PLASTIC / CERAMIC	1	994658
4	BONNNET NUT	BRASS	1	994721
5	BONNET CAP	METAL	1	994713
6	HANDLE ASSEMBLY	METAL	1	1030710
7	MOUNTING KIT	STEEL	1	994684

Specifications are subject to change.

© 2014 Interline Brands, Inc.