Model 120342LF

Description

- Twin lever handle lead-free widespread lavatory faucet
- PVD brushed nickel finish
- All brass construction with lead-free waterways
- Wear-resistant ceramic disc cartridge
- Suitable for 6" to 16" on-center, three-hole installations
- Includes brass pop-up with color-matched trim
- Swivel spout
- 1/2" IPS connections

Performance

- EPA WaterSense labeled to provide 1.5 GPM at 60 PSI

Compliance

- Designed to comply with requirements of ASME A112.18.1
- Meets or exceeds CSA B125
- Meets lead-free requirements of NSF 372
- Meets lead-free requirements of California Health & Safety Code 116875
- Complies with toxicity requirements of NSF 61-9 and CA Proposition 65
- Complies with ADA (Americans with Disabilities Act)

Listings

- IAPMO (International Association of Plumbing & Mechanical Officials)
- cUPC (Uniform Plumbing Code & Canadian Uniform Plumbing Code)
- CSA-US (Canadian Standards Association-US)
- IAPMO Certified Lead-Free
- EPA WaterSense Approved

Warranty

- Limited Lifetime Warranty

  Refer to Premier Faucet warranty program for further details and restrictions.

Charlestown™

Model 120342LF

Twin Lever Handle Widespread Lavatory Faucet

PVD Brushed Nickel Finish

Includes Brass Pop-Up

1/2" IPS Connections

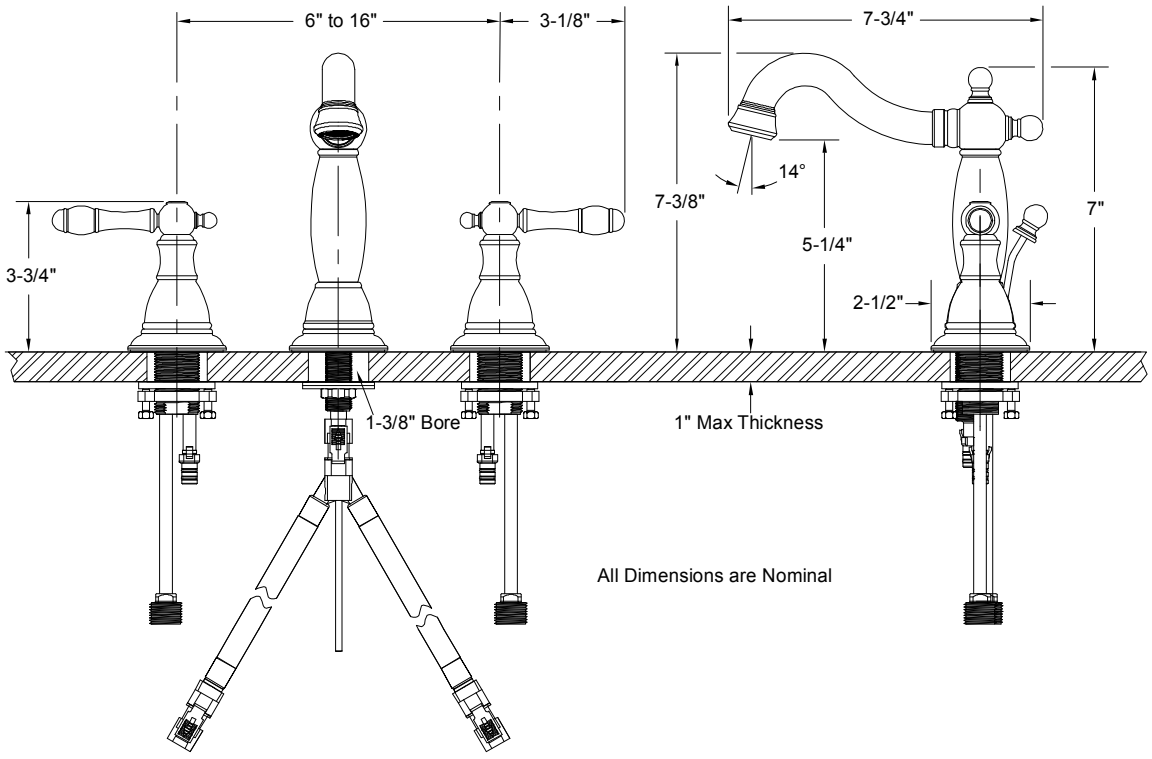

For additional information, contact Premier Faucet at 866-745-4010 or visit our website at www.premierfaucet.com.

Dimensions and specifications are subject to change.
© 2014 Interline Brands, Inc.